Hall Mirror • Making Jigs & Fixtures
Handy Tool Tote • Mortise & Tenon: Step-by-Step

Woodsmith®

Vol. 17 / No. 98

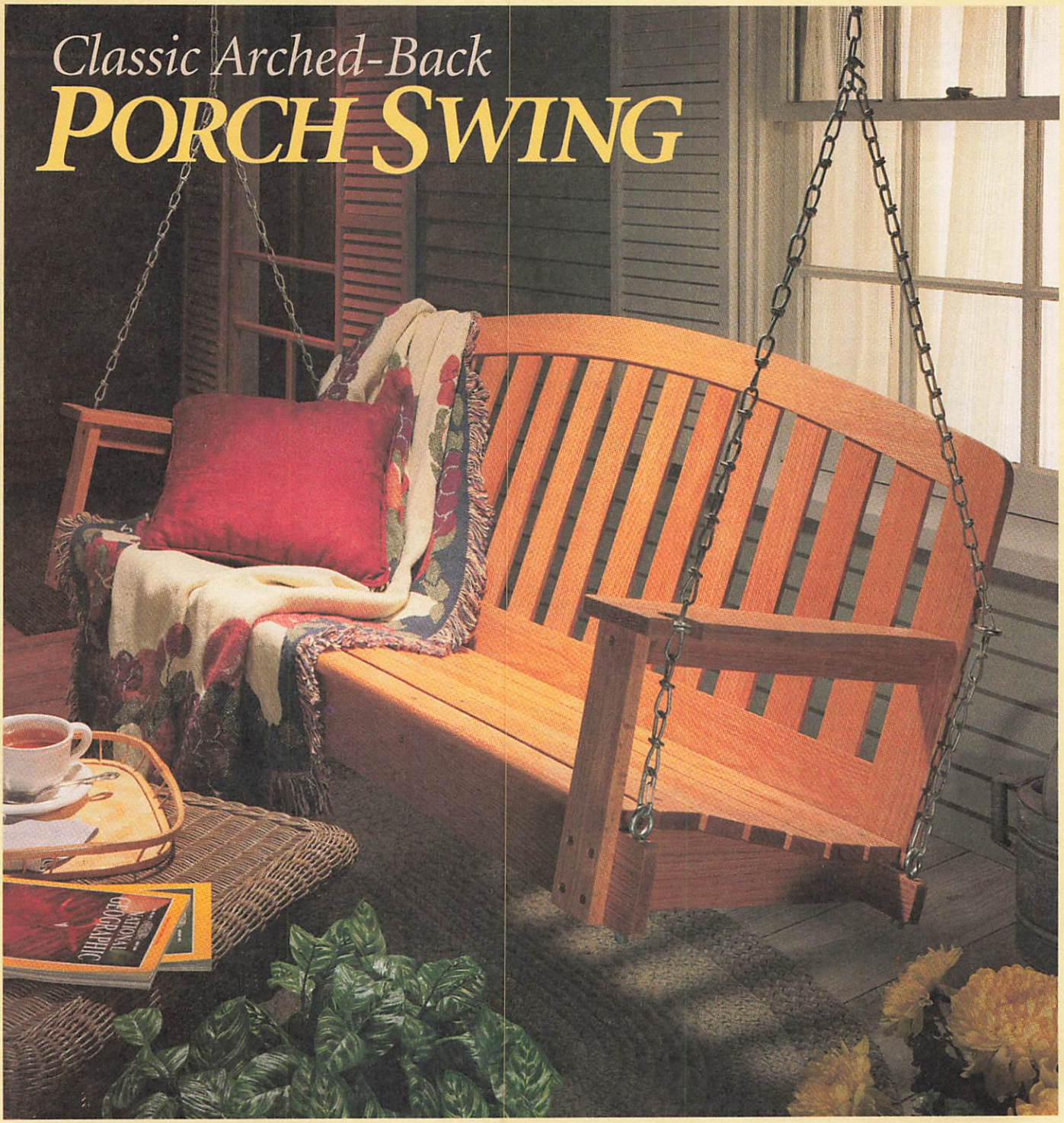

No. 98 April, 1995

Woodsmith®

Editor Donald B. Peschke
Executive Editor Douglas L. Hicks
Managing Editor Terry J. Strohman
Assistant Editors James M. Dolan, Jonathan Garbison, Mark A. Williams

Creative Director Ted Kralicek
Senior Illustrators David Kreyling, Cinda Shambaugh, Dirk Ver Steeg
Illustrator Erich Lage
Photographer Crayola England
Electronic Graphics Chris Glowacki
Design Director Ken Munkel
Senior Designer Kent Welsh
Shop Manager Steve Curtis
Shop Asst./Facilities Steve Johnson

CIRCULATION

New Business Manager.: Sandy Baum • *Renewal Manager.:* Phyllis Jessen • *Direct Mail Manager.:* Troy J. Dowell • *Newsstand Sales:* Kent A. Buckton • *Circulation Analyst:* Shane Francis

PUBLISHING SERVICES

Mgr: Gordon Gaippe • *Graph. Artist:* Cheryl L. Cynor

CORPORATE SERVICES

Planning Director: Jon Macarthy • *Controller:* Robin Hutchinson • *Account.:* Laura Thomas • *Bookkeeping:* Julie Greenlee • *Production Mgr.:* Carol Quijano • *Info. Serv. Mgr.:* Joyce Moore • *Elec. Pub. Coord.:* Douglas M. Lidster • *Network Adm.:* Nick Thielen • *Admin. Assistants:* Cheryl A. Scott, Julia Fish • *Receptionist:* Jeanne Johnson • *Build. Maint.:* Ken Griffith

WOODSMITH MAIL ORDER

Art Dir.: Cindy Jackson • *Catalog Prod. Mgr.:* Bob Baker • *Inv. Control/Prod. Mgr.:* Mark Mattiussi • *Proj. Supplies:* Linda Jones • *Tech. Supp:* Dave Stone • *System Operator:* Tammy Aldini

CUSTOMER SERVICE

Manager: Jennie Enos • *Team Leader:* Karla Cronin • *Customer Service Reps.:* Jennifer Murphy, Joy Krause, Sara Kono, Anna Cox, Lonnie Algreen, Adam Best, Kristi Andrews

SHIPPING DEPARTMENT

Supr: Nancy Johnson • *Fulfillment:* Gloria Sheehan, Chuck Carlson, Sylvia Carey, Larry Prine

WOODSMITH STORE

Manager: Dave Larson • *Assistant Manager:* Paul Schneider • *Sales Staff:* Wendell Stone, Pat Lowery • *Office Manager:* Vicki Edwards

Woodsmith® (ISSN 0164-4114) is published bimonthly (Feb., Apr., June, Aug., Oct., Dec.) by Woodsmith Corp., 2200 Grand, Des Moines, IA 50312.
Woodsmith® is a registered trademark of Woodsmith Corp. Copyright© 1995 Woodsmith Corporation. All rights reserved.
Subscriptions: Single copy: $3.95. One year subscription (6 issues), $19.95. Two years (12 issues), $35.95. (Canada/Foreign add $5 per year, U.S. funds.)
Second Class Postage Paid at Des Moines, IA and at additional offices.
Postmaster: Send change of address to *Woodsmith*, Box 10718, Des Moines, IA 50350.
Subscription Questions? Call **1-800-333-5075**, 8:00 am to 5:00 pm, Central Time, weekdays.
E-Mail. Prodigy: EDJE97A, CompuServe: 75330,2301, Internet: 75330.2301@compuserve.com., America Online: Donpeschke.
Printed in U.S.A.

E D I T O R ' S C O L U M N

Sawdust

We purchased our building (an old brick colonial) back in 1983. At the time we had more space than we knew what to do with. But as the magazine has grown so has the size of the *Woodsmith* family. Until finally we ran out of space. So about a year and a half ago we started a remodeling project to add more space.

Like most construction projects, it took longer than expected. In fact, some of the workers spent so much time here I began to think of them as part of the staff. But the remodeling is finally done, and everyone is settling into their new offices.

It seems appropriate (perhaps even symbolic) that work on the building is complete just as we approach another important event here at *Woodsmith* — Issue No. 100.

ISSUE 100

When I was a little boy, I kept pennies in a small glass jar in my room. One by one I added pennies to that jar until one day it was full. When I counted them, I couldn't believe it. I had a dollar — 100 pennies. I couldn't wait to do something special with my hard earned-savings.

Well I feel the same way about the 100th issue of *Woodsmith*. I want it to be special.

So we've been busy working on some new ideas for that issue. And one of those ideas is something I've wanted to do for a long time — show some of the projects that our readers have built.

Over the years readers have sent in hundreds of photos of *Woodsmith* projects they've built. We'll be looking through them again when it comes time to pick some to show in Issue No. 100.

However, we don't want to leave anyone out. So if you've built a *Woodsmith* project and would like it to be considered for the Project Gallery, please send color photos or slides and a brief description to: *Woodsmith* Project Gallery, 2200 Grand Ave., Des Moines IA 50312.

Note: The entry deadline is May 1st, 1995. Any photos that we receive will not be returned and will become the property of *Woodsmith* Corporation.

NEW FACES

Over the past few weeks there have been several additions to the *Woodsmith* family. To begin with, Erich Lage is our new Illustrator. He will be helping produce some of the drawings in each issue. In addition to being a talented artist, Erich is also a skilled woodworker. He has spent several years working as a professional trim carpenter. And in his spare time he has built a wide variety of woodworking projects in his home shop.

Dave Stone is our new Technical Support person. If you write or call with a question about a project, Dave will help find the answer for you.

Also, Adam Best has joined our Customer Service Team.

HELP WANTED

Speaking of new faces, believe it or not, we're looking for a couple more.

EDITOR. First of all, we're looking for someone to join our editorial staff. Candidates should have first-hand knowledge of woodworking and a strong background in writing and communicating ideas.

If you're interested in this position, write us a letter explaining your qualifications. Send your letter to: Doug Hicks, Executive Editor, *Woodsmith* Publishing, 2200 Grand Ave., Des Moines, IA 50312.

ART DIRECTOR. We're also looking for someone to fill the position of Art Director. Applicants should have a strong background in magazine design, layout, and desktop publishing. Experience in woodworking and photography would be very beneficial.

If you're interested, send your resume to: Ted Kralicek, Creative Director, *Woodsmith* Publishing, 2200 Grand Ave., Des Moines, IA 50312.

IN THIS ISSUE

With everything else that's been going on we also managed to put out this issue of *Woodsmith*. The feature project this time is a porch swing (page 6). It's something that Ted (our Creative Director) has been wanting to do for some time. And I couldn't be more pleased with the results.

The other two projects in this issue, the hall mirror (page 18) and the tool tote (page 26), both feature basic joinery techniques: mortise and tenon and box joints. Best of all, the projects aren't complicated and can be built over a weekend.

Don

Contents

FEATURES

Porch Swing 6

A porch swing should be comfortable and strong. This one features a curved seat and an angled back for comfort. And solid mortise and tenon joints for strength.

Mortise & Tenon 14

A special bit and a simple step-by-step technique are the secrets to cutting tight-fitting mortise and tenon joints.

Hall Mirror 18

This weekend project is a simple mortise and tenon frame with a few extras: a small shelf, some coat pegs, and strips of applied molding.

Jigs & Fixtures 22

A close-up look at the materials and hardware we use to build precision into the jigs in our shop.

Tool Tote 26

Just a common tool tote — except it's joined with pinned box joints. These make it strong yet easy to build. Plus, there's a sliding tray to hold tools that tend to get buried.

Outdoor Woodscrews 30

Not all outdoor woodscrews are alike. Here's some help on choosing the best type for your next project.

DEPARTMENTS

Tips & Techniques 4
Shop Notes 16
Sources 31

Porch Swing *page 6*

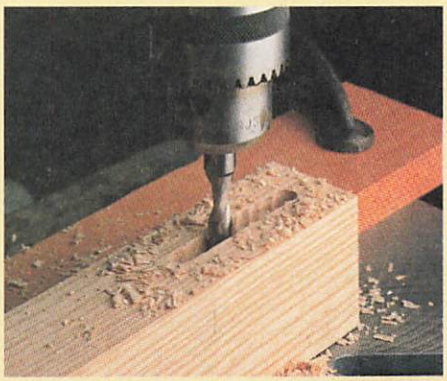

Mortise and Tenon *page 14*

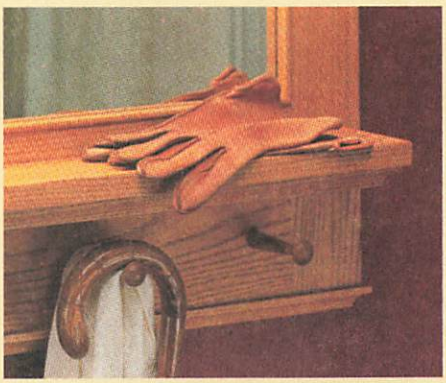

Hall Mirror *page 18*

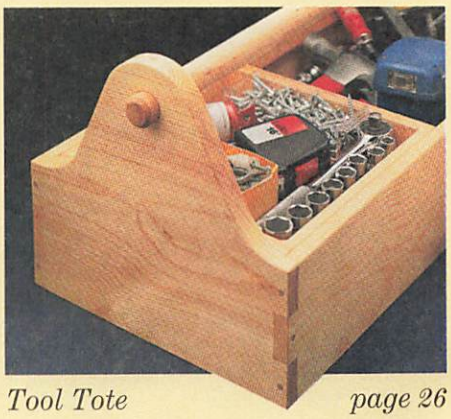

Tool Tote *page 26*

Tips & Techniques

SPLINES

■ When I glue up long pieces of wood (for a table top), I'll use splines to keep them aligned. But the problem is getting splines cut to a uniform thickness. Since most boards aren't perfectly straight, it's hard to cut splines that aren't either too thick or too thin.

To solve this problem, I convert my dado blade into a "spline cutter." It's simple to do. Just add a spacer between the two outside blades from a stacked dado set, see Fig. 1.

There are two things to keep in mind when making the spacer. First, you need to use a hard wood. You don't want the spacer to compress when the arbor nut is tightened. Otherwise the spline thickness ends up smaller. (Spacers made from oak or maple work best).

And second, the spacer may need to be cut a little thicker than the spline thickness you want. That's because the set of the teeth on some dado blades undercut the spline thickness.

Once you get the spacer set to the thickness you need, it will always cut the same size spline. Note: I'll mark the spline size right on the spacer.

With the spacer in place, raise the blade height to set the spline width. Then feed the edge of your workpiece through the blades, see Figs. 2 and 2a.

Finally, to free the spline from the board, change to a regular saw blade and make a rip cut on the workpiece. The spline, along with the waste material, will be cut free.

Milt Magle
Lenexa, Kansas

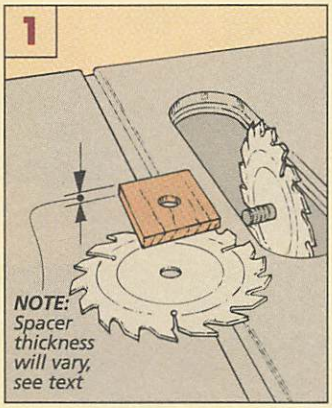

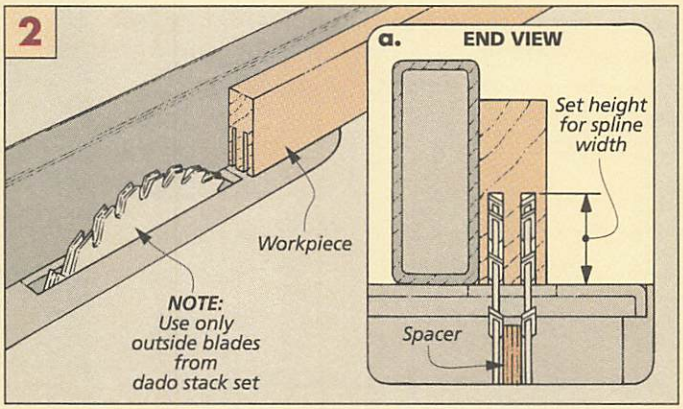

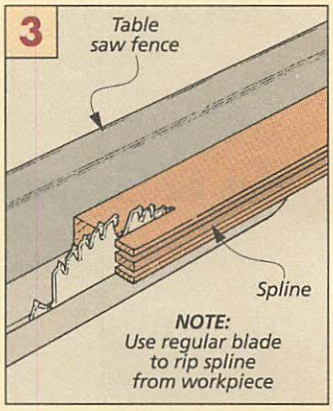

PLEXI-CURVES

■ In the past I've used a piece of Masonite when drawing an arc for a project. But the Masonite would break on small tight arcs before I could bend it tight enough. That's when I decided to try using a piece of Plexiglas to form an arc instead.

Plexiglas is more pliable than Masonite. So you can make tight bends without breaking. It's also more rigid. When you press against it with your pencil it won't bend or flex.

To create an arc, use a couple brads to hold the Plexiglas and then trace along the inside edge, see drawing.

Jim Clement
Seattle, Washington

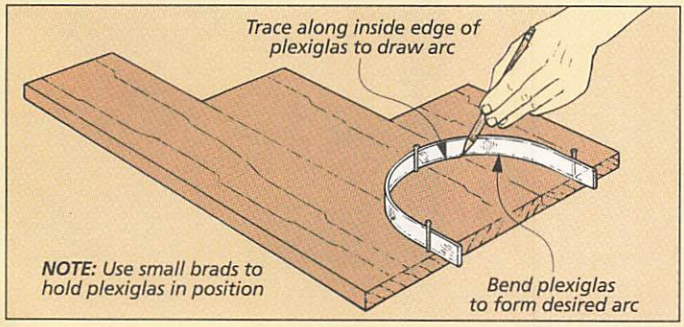

QUICK TIPS

INSTALLING INSERTS

■ Installing threaded inserts is never easy. They always seem to go in crooked, or you break off the screwdriver slot in the top. To solve this problem, I soften the wood fibers first. Just take a wet Q-tip dipped in water and swab the inside of the hole. The threads cut into the softened fibers easier.

Yosh Sugiyama
Redding, California

QUICK PATTERNS

■ In the past I've made patterns out of Masonite — especially when making a lot of intricate cuts or I didn't want to mark layout lines on the wood. But it's difficult to transfer the pattern lines to the Masonite. Then I started using left-over pieces of plastic from x-rays. It's heavy duty, easy to see through, and can be marked-up with a permanent marker. Best of all, the clinics or medical centers give the plastic sheets away free.

John Buckton
Des Moines, Iowa

EPOXY REMOVER

■ I use epoxy adhesive (the kind with two tubes that you mix together) around the house and shop to repair many projects. But I always get a little on my hands when mixing it up. Instead of having messy fingers for days, I've found a little fingernail polish remover will dissolve the epoxy immediately.

George Reight
Decatur, Georgia

FEATHERBOARD

▲ *Once the featherboard fence is clamped to the table saw, the featherboard can be positioned anywhere along the workpiece. A couple wing nuts on top securely lock it in place.*

■ A featherboard is a good idea whenever you rip long or narrow pieces on the table saw. But it can take forever to get it in position and clamped securely to the table top.

That's why I made a featherboard fence. It's like another rip fence installed on the left side of the blade. It spans the full depth of my table saw so it's easy to put a couple of C-clamps at the ends to firmly lock it in position.

The featherboard fence is just two pieces of ¾"-thick stock. They're held parallel to each other forming a ¼"-wide groove down the center. This groove forms a slot so the featherboard can slide back and forth for adjustment. Note: The fence will accomodate a second featherboard if needed. To hold the pieces together, I glued and screwed them to spacer blocks located at each end, see Fig. 1.

Once the fence was complete, I cut the featherboard to size, see Fig. 2. To attach it to the fence drill two counterbored holes in the featherboard. Note: Make sure the lay-out line for the holes runs parallel to the angle cut on the end.

Finally, install carriage bolts through the featherboard and the slot in the fence and lock it in place with wing nuts, see Fig. 3. (I used the large plastic wing nuts, but any kind will do.)

Dave McNabb
Glendale, Arizona

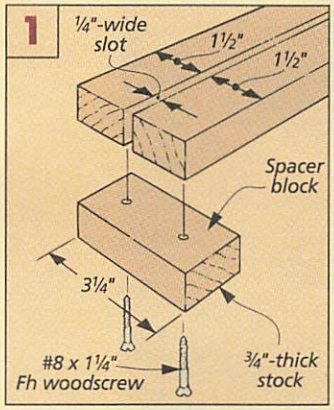

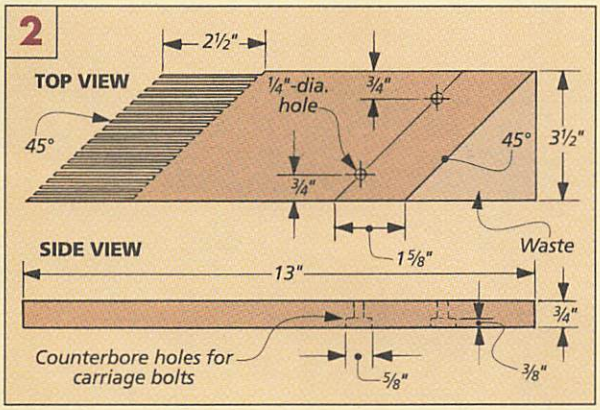

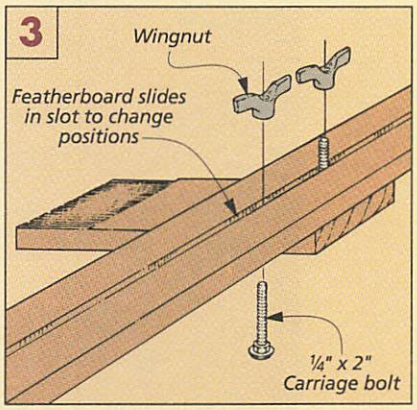

PICTURE POLE

■ I build a lot of picture frames in my shop. But the problem isn't building them — it's hanging them on the wall. The picture frames always end up either a little too high or too low.

To solve this problem, I came up with a simple jig. It's just a ¼"-thick piece of Masonite with a screw in one end and a knob on the other, see drawing.

To use the jig, hook the picture over the screw head and hold it against the wall. Once you have the frame where you want it, push in on the Masonite so the screw point leaves a mark where the nail needs to go.

Bob Reeve
Yucaipa, California

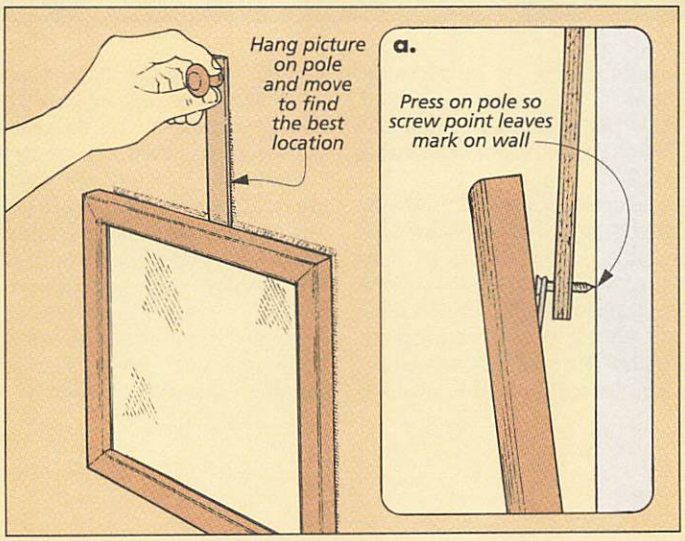

SUBMIT YOUR TIPS

If you'd like to share an *original* shop-tested tip, please send it to *Woodsmith*, Tips and Techniques, 2200 Grand Avenue, Des Moines, Iowa 50312. Or if it's easier, you can fax or E-mail us your shop tip. Our fax number is 515–282–6741. For E-mail, you can reach us at 75330.2301@compuserve.com.

If we publish your tip, we'll send you $30 to $150, depending on the published length. Include a brief explanation and sketch (or photo). And don't worry, we'll rewrite the tip and redraw the art if necessary. Also, *please* include a daytime phone number.

Porch Swing

Curved workpieces can make a project more challenging to build. But the back of the Swing and also the seat are curved for a couple important design reasons — appearance and comfort.

As the design of this porch swing was progressing, there were a couple elements I particularly liked. The arched back gives the swing a graceful look, almost like an English garden bench. It also makes the swing more of a challenge to build.

Just as important as appearance, I wanted the swing to be strong. I've seen some swings that are suspended entirely by the arms. But this one is held up by bolts through a pair of rails *under* the seat, see photo above.

The seat slats are strengthened by seat supports that connect the rails, see Exploded View on the facing page. This makes the seat as solid as the floor in a new home.

JOINERY & MATERIAL. The strength of the swing is also affected by the material and joinery used. For the wood parts of the swing I used red oak. Plenty strong to hold a couple of adults. And for extra strength, the back of the swing is built with mortise and tenon joints.

COMFORT. Strength is important in a project that's going to support the weight of a person swinging. But comfort should also be part of the design. So, to make the seat of the swing comfortable there's a gentle curve on the top edge of the seat supports. This way, the slats follow the contour of your body as you're sitting.

Finally, all the edges of every piece of wood that your body will touch have been softened by sanding, or rounded over with a router.

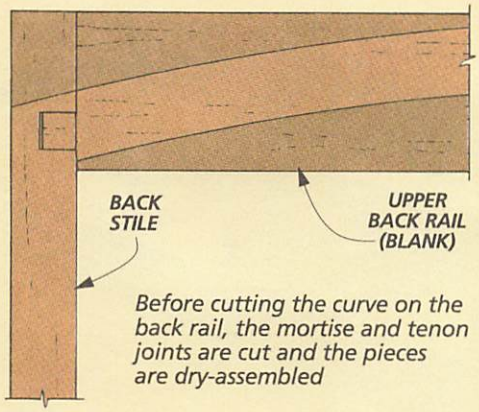

Before cutting the curve on the back rail, the mortise and tenon joints are cut and the pieces are dry-assembled

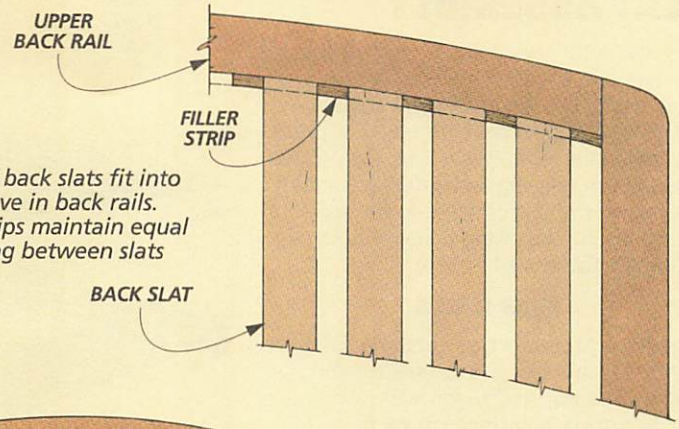

Ends of back slats fit into groove in back rails. Filler strips maintain equal spacing between slats

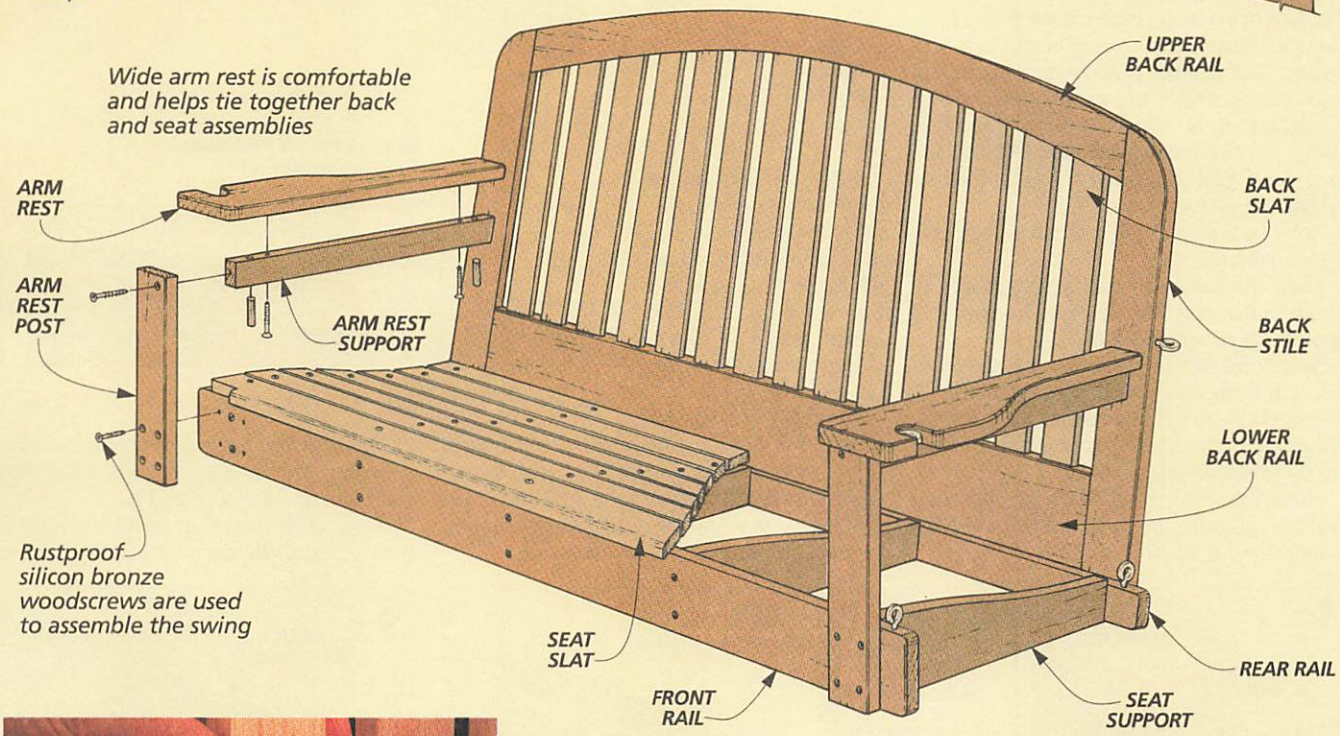

Wide arm rest is comfortable and helps tie together back and seat assemblies

Rustproof silicon bronze woodscrews are used to assemble the swing

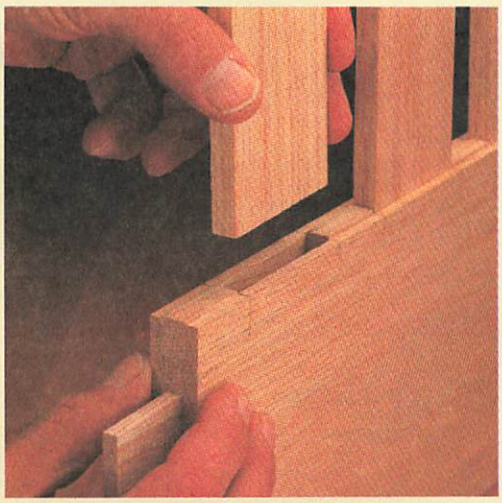

Evenly-spaced Mortises. *The slats in the back of the porch swing fit in a series of mortises. But they're not cut in the usual way. They start out as one long groove. Evenly-spaced filler strips "plug" the groove to form the mortises.*

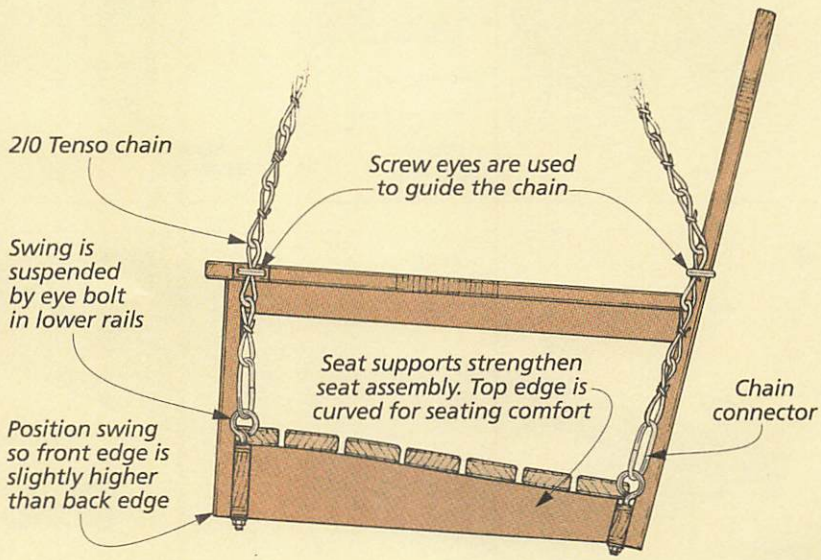

SEAT ASSEMBLY

The seat of the swing starts out as a frame. It's built like a ladder with curved "rungs" (seat supports), see drawing at right.

The seat supports reinforce the frame, but that's not all they do. The curved top edge of each seat support is a design feature that makes the seat conform to the shape of your body. So the swing is not only strong, it's comfortable to sit in, too.

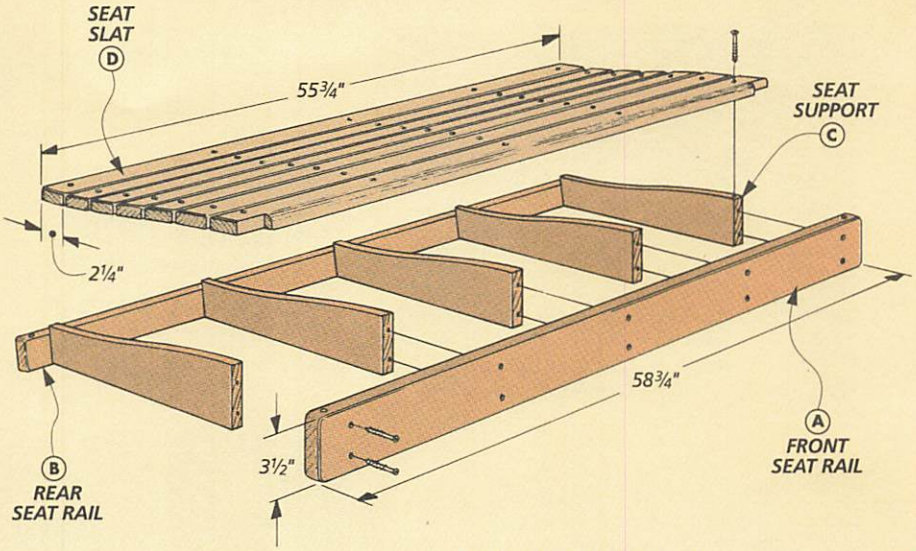

SEAT RAILS

In addition to comfort, one of the key design features of this swing is the suspension system. The chains that support the swing are attached to eye bolts in the frame of the seat. This means the entire swing is securely suspended. Not just the arms, which is the way many porch swings are suspended.

SEAT RAILS. So that's where I started. First I cut the **front seat rail (A)** and the **rear seat rail (B)** to the same finished length, see drawing at right.

Note: I used ¾"-thick red oak for all parts of the seat assembly.

Then the front rail can be ripped to finished width, see Fig. 1. And the rear rail ripped to a *rough* width of 2".

Now, drill a 5/16" hole for an eye bolt through both ends of each rail, see Fig. 1. The eyebolts are the hardware that the entire swing is suspended from, refer to drawing on previous page.

Shop Note: Unless you have an extra-long drill bit, the holes on the front rail will have to be drilled from both sides.

After all four holes have been drilled in the rails, the rear seat rail can be ripped to finished width. To do this, adjust the angle of the saw blade to cut a 10° bevel along the top edge of the rail, see Fig. 2.

SEAT SUPPORT PATTERN
One square = 1"

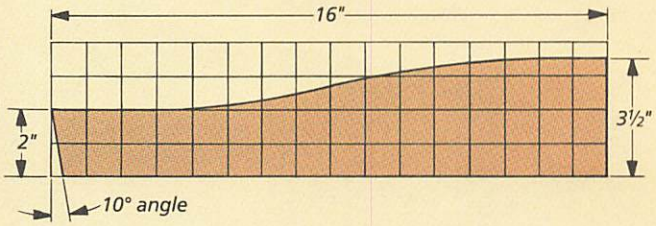

Note: There's a good reason for ripping this bevel. On a typical porch swing, water and debris can accumulate in the crack between the seat and back. (The same way pocket change gets trapped behind the seat cushions in a sofa.)

The bevel turns this crack into a channel, so water and dirt can flow out more easily, refer to Fig. 18a on page 11.

Now, before moving on to the seat supports, round the corners of both seat rails

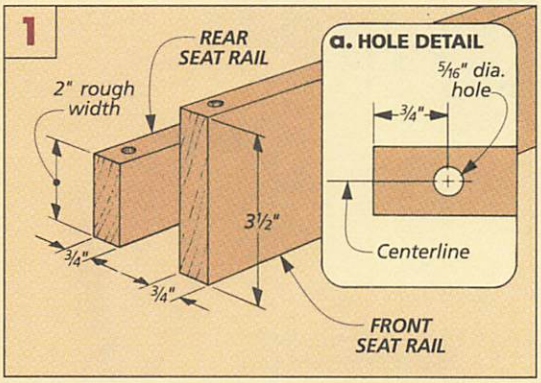

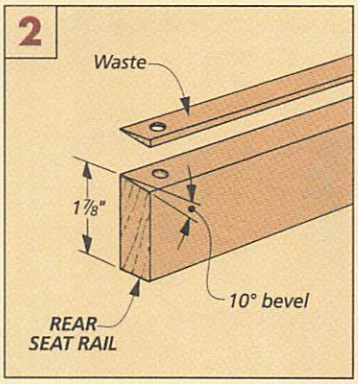

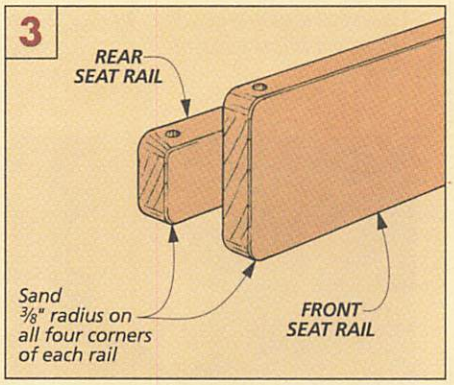

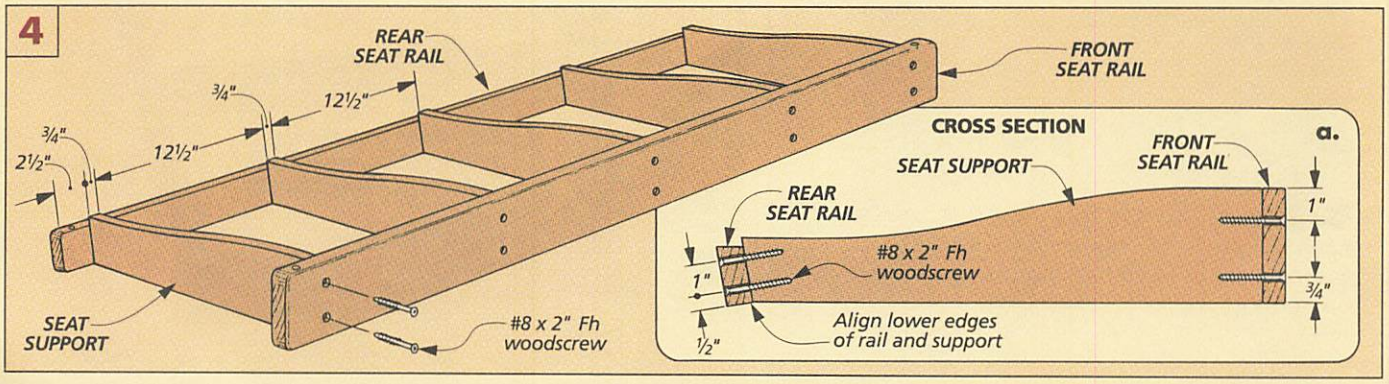

by sanding a 3/8" radius on each, see Fig. 3. Then soften all the edges of the rails with a sanding block.

SEAT SUPPORTS

The seat rails are connected by five seat supports, like the rungs of a ladder, see drawing at left. These support the seat slats and also strengthen the seat assembly.

To make the seat slats conform better to the human body, there's a gentle curve along the top edge of the seat supports. And there's a simple way to cut these curves so they're all identical.

SEAT SUPPORTS. To make the supports, start by cutting a blank 4" wide and 16" long for each of the five **seat supports (C)**.

Next, transfer the curve shown in the pattern at left onto one of the blanks. Note: It's not important that the curve be perfect. Only that it have a smooth shape.

Then cut along the curved line, and sand the curve smooth.

Now this first seat support can be used as a template to lay out the curve on the remaining four blanks.

After the curved shape has been cut on all five seat supports, a 10° miter can be cut across the back end of each support, see pattern at left. This establishes the angle of the back assembly.

ASSEMBLY. Now the frame of the seat is ready to be assembled. To do this, there's a pair of woodscrews installed through the front and back rails into each of the seat supports, see Figs. 4 and 4a.

Note: I used special outdoor woodscrews to hold the parts of the swing together. And drilled countersunk shank holes for all the screws, see box at right. For more on outdoor woodscrews, see the article on page 30.

SEAT SLATS

The last thing to do on the seat assembly is to make the seven seat slats. I started by cutting the **seat slats (D)** to finished dimensions, see Figs. 5 and 7.

Then, the edges of all the slats need to be softened to prevent splinters and make the seat more comfortable. To do this, rout a 1/8" roundover on all the edges, see Fig. 5.

Now set aside six of the slats and continue with just the front slat. For this, I went a couple steps further.

To make the front slat less sharp on the back of your knee, there's a larger (3/8") roundover routed on the top front edge, see Figs. 6 and 7b. And a notch on the front corners of the slat makes room for the arm post added later, see Fig. 6.

ATTACH SLATS. Now the seat slats can be screwed to the seat frame. And to give all the slats the appearance of being equally spaced, I followed a certain sequence when screwing them to the seat supports.

First, attach the front slat so it overhangs the front seat rail (A) by 1/2" — the same as the depth of the notch, see Fig. 7b.

Note: All the slats should be centered on the frame from left to right. On my swing, this means the slats overhang the outside seat supports by 1" on each end, see Fig. 7a.

Also note that the screw holes should be drilled so the screws align to the centers of the seat supports, see Figs. 5, 6, and 7.

Now, attach the rear slat in the same manner as the front — but this slat overhangs the seat support (C) by 1/2", see Fig. 7b.

The third slat to install is the middle one, see Fig. 7. This should be centered between the front and rear slats, see Figs. 7 and 7b.

BRONZE SCREWS

Because they're rustproof, silicon bronze woodscrews are perfect for an outdoor project. But while it's harder than brass, bronze is still a soft metal, and the heads of the screws can be twisted off as they're driven. But you can avoid this by drilling the correct size pilot and shank holes, and by not over-tightening the screws.

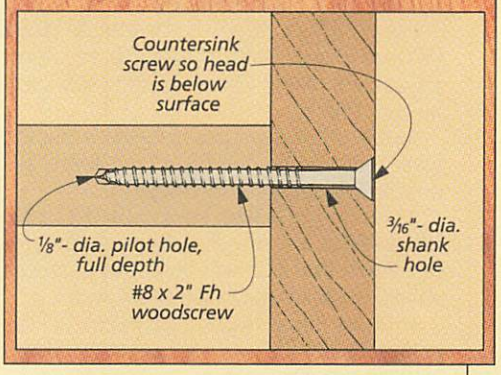

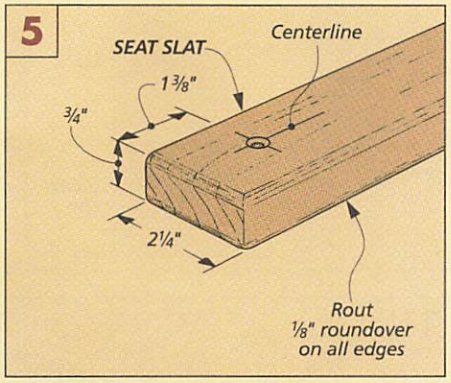

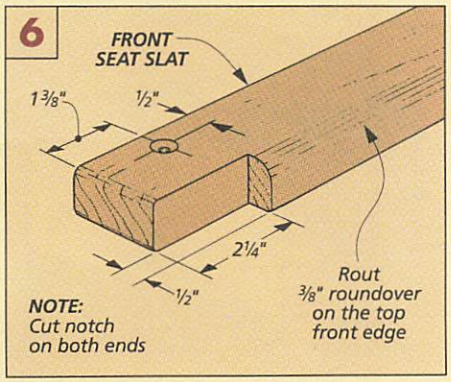

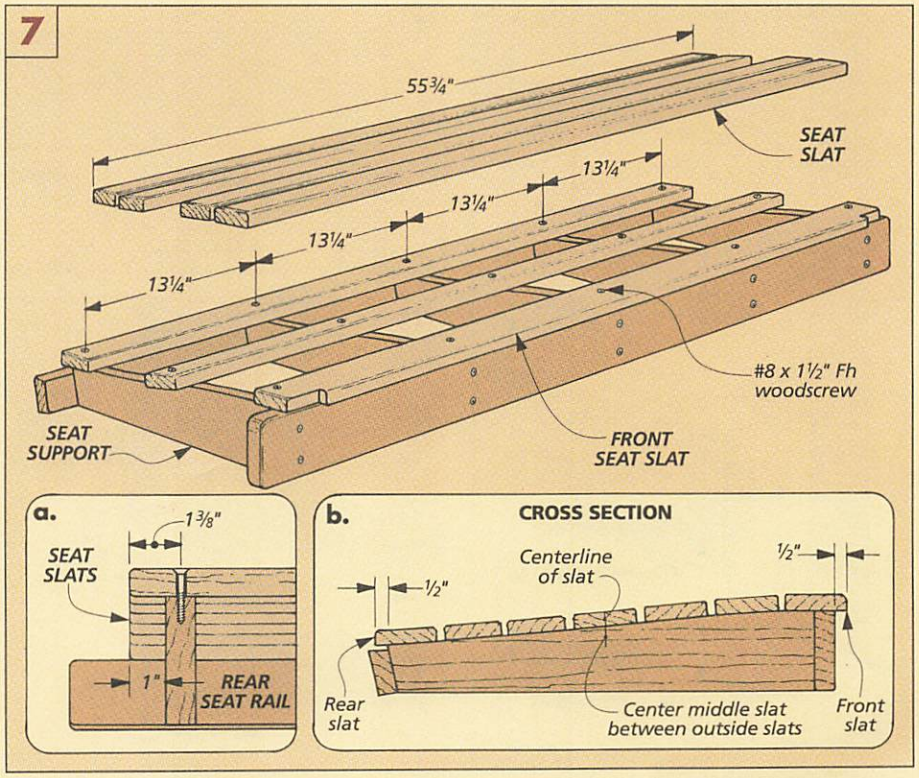

BACK ASSEMBLY

One of the most unique features of this swing is the arched back. It's also the most challenging assembly to build. But if you break the procedure down into a series of steps, the construction goes quite smoothly.

BACK FRAME

The back assembly is just a big frame that holds the back slats in place.

I started by cutting the two **back stiles (E)** to the same width and length, see drawing at right. Note: The tops of the stiles will be cut off later.

RAILS. After the stiles have been cut, the back rails can be cut. First I cut both rails the same length, see drawing.

Then rip the **lower back rail (F)** to finished width, see drawing. Because the **upper back rail (G)** will be cut to a curved shape, the blank for it starts out wider.

JOINERY. Now, work can begin on the joinery that holds the frame together. Begin by laying out the mortises and tenons on the stiles and rails, see Fig. 8. For tips on cutting the joints, refer to the article on page 14. And refer to page 16 for cutting off-center tenons.

CUT ARCS. After the joints have been cut, dry assemble the frame and lay out the top arc on the rail and across the stiles, see Fig. 9. Then cut this arc and sand it smooth. (With the frame still assembled.) Note: See page 17 for tips on laying out parallel arcs.

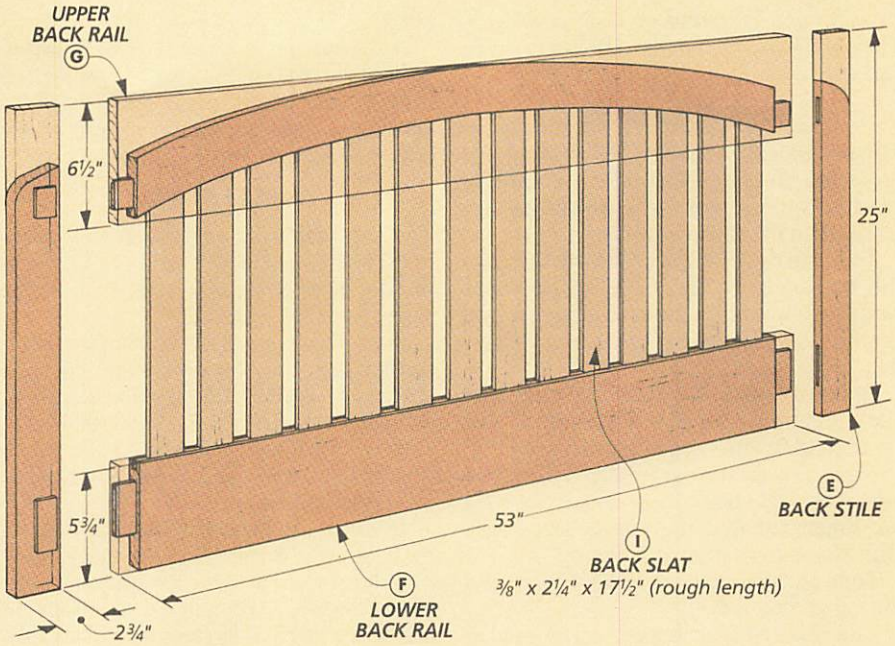

When both arcs were cut and sanded, I began work on the joinery for the back slats.

GROOVES FOR SLATS. The back slats for the porch swing fit between the upper and lower rails.They fit in the frame like tenons in mortises. But instead of drilling a lot of mortises, I used a simpler technique.

The mortises start out as one long groove cut on the inside (facing) edges of the back rails, see Fig. 10a. Then, when the grooves are filled with short filler strips, a series of mortises are created.

ROUT GROOVES. To cut the grooves so they're centered on the thickness of the rails, I used a ¼" slot cutter in the router, see Fig. 10. Each ⅜"-wide groove is routed

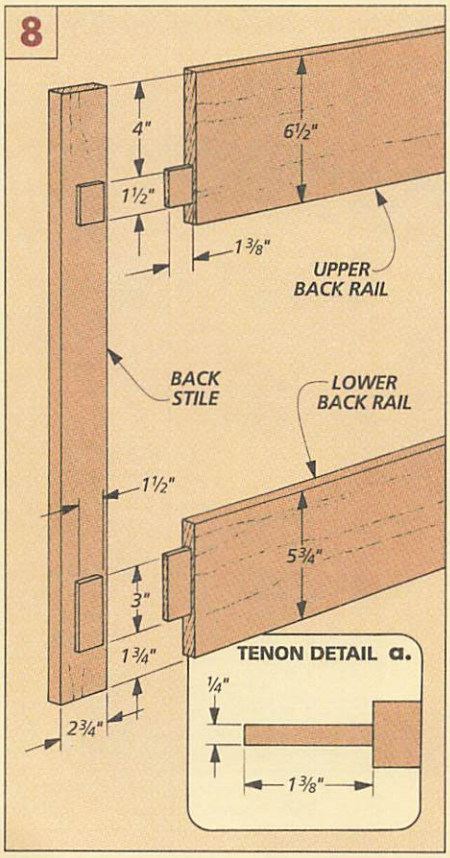

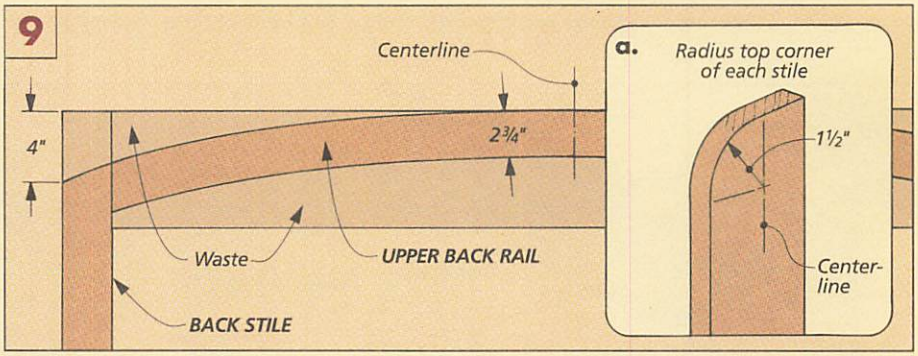

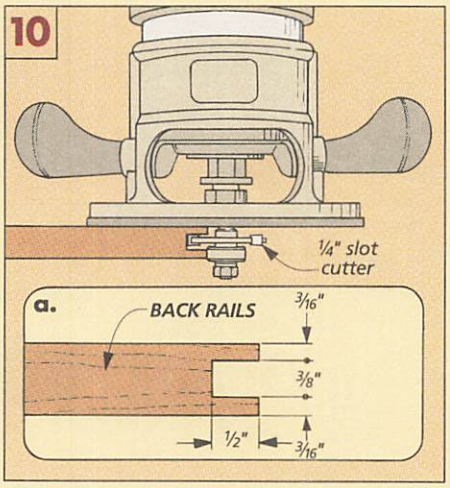

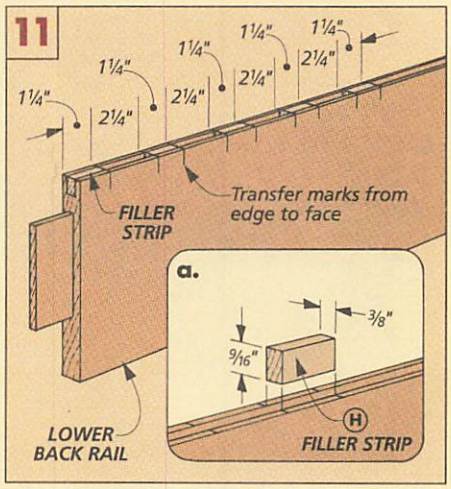

in two passes (one from each face of the rail), see Fig. 10a.

LOWER MORTISES. Next, lay out the position of the back slats on the top edge of the lower rail, see Fig. 11. Then transfer the marks to the front face of the rail.

FILLER STRIPS. Now, I moved on to cutting the filler strips that turn the groove into a series of mortises. The easiest way to do this is to start with a long strip of wood the same thickness as the width of the groove.

Then rip the strip so it's slightly *wider* than the depth of the groove, see Fig. 11.

Now this long strip can be cut into 1¼"-long **filler strips (H)**, see Fig. 11a. Then, when the strips are glued in the groove at equal (2¼"-wide) intervals, mortises are created for the back slats. Note: I used a water-resistant glue (Titebond II).

UPPER MORTISES. To create the mating mortises on the upper rail, I used a similar procedure. Start by transferring the marks from the lower rail to the upper rail using a framing square, see Fig. 12.

After the lay-out lines are drawn on the upper rail, more filler strips can be glued in this groove, see Fig. 13.

Note: Because the rail is curved and the marks are straight, one end of each filler strip will need to be trimmed, see Fig. 13a.

TRIM FLUSH. Now the filler strips can be trimmed to fit perfectly flush, see Fig. 14.

After the filler strips are trimmed flush, sand the edges of the rails, see Fig. 15.

BACK SLATS

Now the back slats can be cut. Start by ripping a blank to fit each mortise from ⅜"-thick stock. In my case, all the blanks are 2¼" wide.

Note: The **back slats (I)** should all start out the same rough length (17½").

CURVED CUTS. Now the slats can be cut to finished length. But because the top rail is curved, the length of the slats will vary depending on their location in the frame.

There's a simple technique for marking the slats the correct length. It involves resting them on a piece of scrap clamped to the lower rail, see Fig. 16. Note: The scrap should be clamped 1" *lower* than the rail to allow for both ½"-deep mortises.

Now the curve of the upper rail can be drawn on the top end of each slat, see Fig. 16. Then the slats can be cut to length along the curved line.

Finally, the frame can be assembled with the slats in the mortises, but only glue the tenons in the stiles. The slats are *not* glued in the rails.

Before attaching the back to the seat assembly, round over the outside edges of the frame, see Fig. 17. Then the back assembly can be attached to the seat. I used glue and a screw through the rear seat rail into each of the seat supports, see Figs. 18 and 18a.

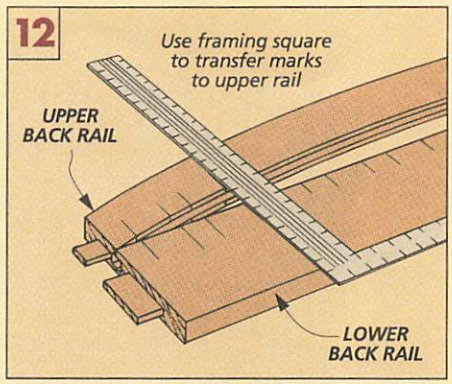

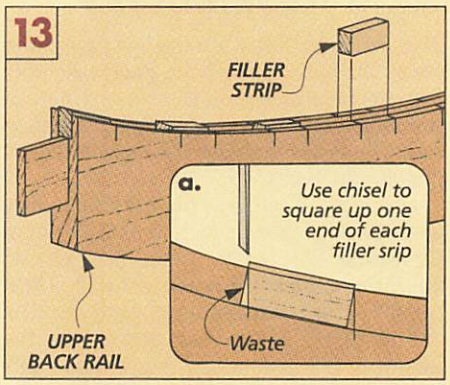

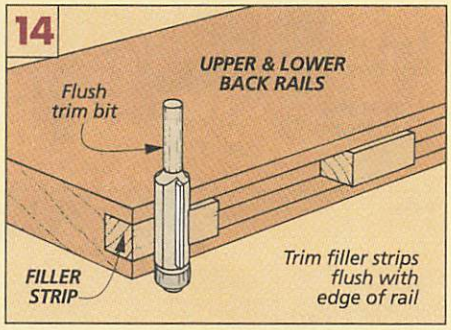

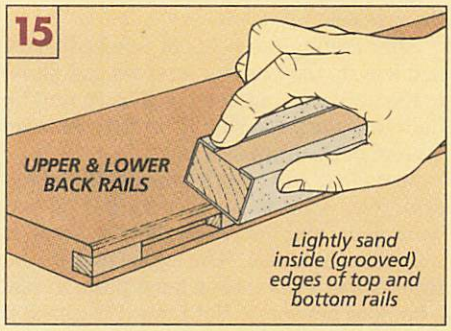

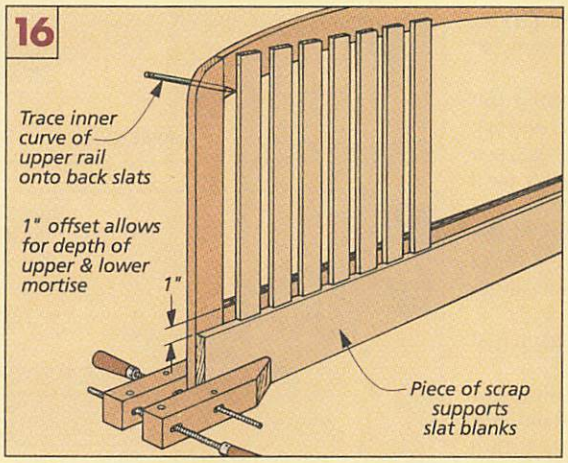

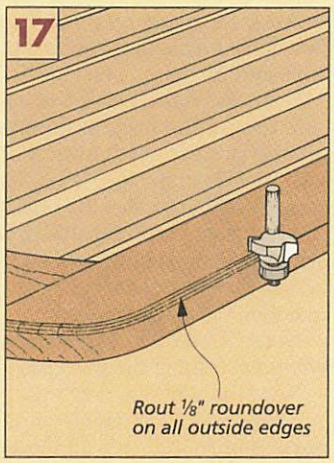

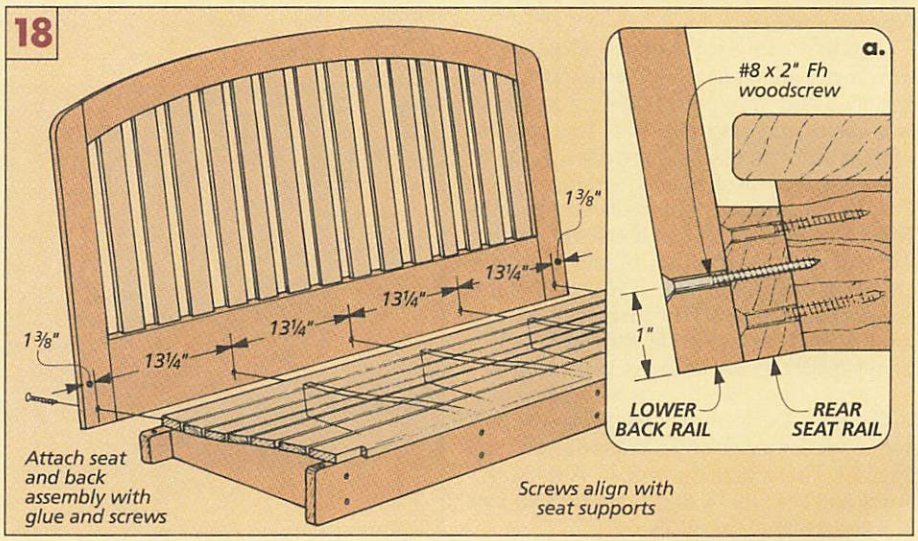

ARM ASSEMBLIES

The arm assemblies are the last part of the swing that need to be built. Each assembly consists of an arm post, an arm rest, and an arm rest support, see exploded drawing at right. I started building the assemblies by making the posts.

ARM POST. Each **arm post (J)** is simply a short piece of stock attached to the front of the swing. The width of the post should equal the width of the notch in the front seat rail (2¼"), see drawing at right and Fig. 21a.

The length of the post determines the height of the arm rest. I found that a 11"-long post produces a comfortable height for the arm rest.

After cutting the posts to finished width and length, they can be screwed and glued to the front seat rail, see Fig. 21a. Note: The bottom of the posts should be flush with the bottom of the front seat rail.

ARM REST. Now work can begin on the arm rest. This is another gently curved workpiece, and the reason for the shape is not just decorative. The wide area at the front of the arm rest is a good place to rest a book or beverage. But toward the back it only needs to be as wide as your elbow.

Work can begin on the **arm rest (K)** by first cutting a blank to rough dimensions (4" wide and 21" long), see Fig. 19.

Next, draw the curved shape along the side toward the back of the blank, and lay out the circular notch toward the front, see Fig. 19. (The notch provides clearance for a screw eye that guides the chain.)

Next, before cutting this profile, cut the arm rest to finished length with a 10° bevel across the back end, see Fig. 20. This angle matches the tilt of the back.

Note: When it's attached, the arm rest should overhang the front post 1".

Now, the arm rest can be cut to shape.

Then sand a ¼" radius on the front corners. And round over all the edges with a ⅛" round-over bit. (Don't round over the beveled ends.)

ARM REST SUPPORT. Before installing the arm rest, I added an arm rest support, then installed both as a unit. (Refer to the drawing above and also Fig. 20.) The support stiffens the arm rest and provides a way of attaching it to the arm post, see Fig. 21.

After the **support (L)** has been ripped to finished width (1½"), cut it to length with a 10° miter across the end. (Again, to match the tilt of the back.) Note: The length of the support should equal the distance from the front post to the back stile, see Fig. 20. (The arm support on my swing is 19⅛" long.)

After cutting the support to finished size and shape, I drilled two holes into the bottom edge for a pair of ½" cross-dowels, see Fig. 20. These give the woodscrews at the front and rear more to grab onto than just the end grain of the support.

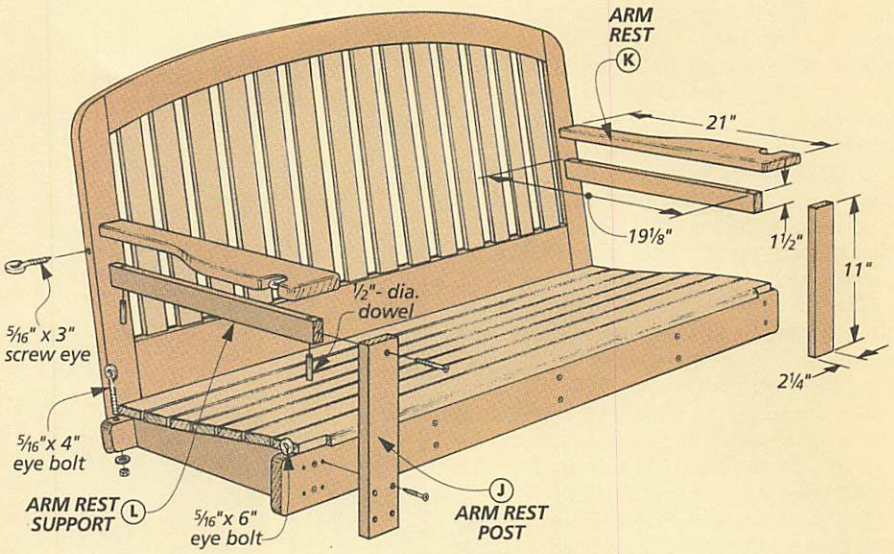

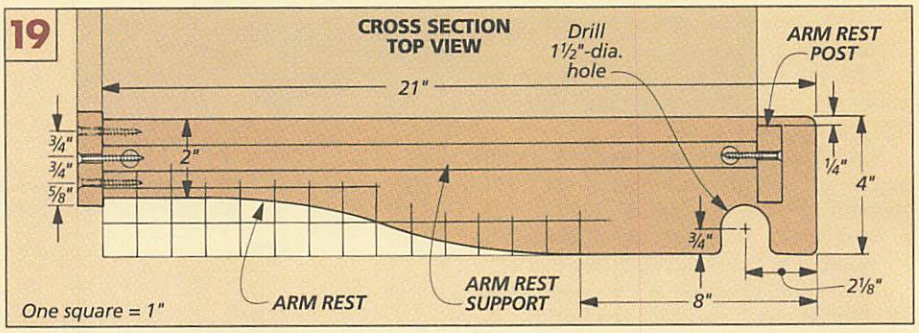

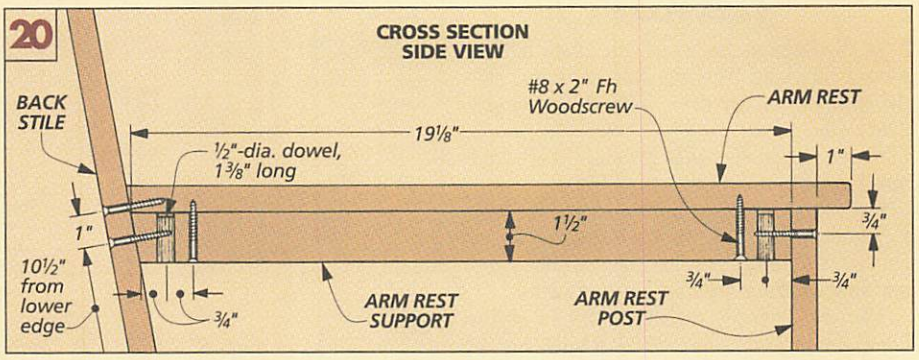

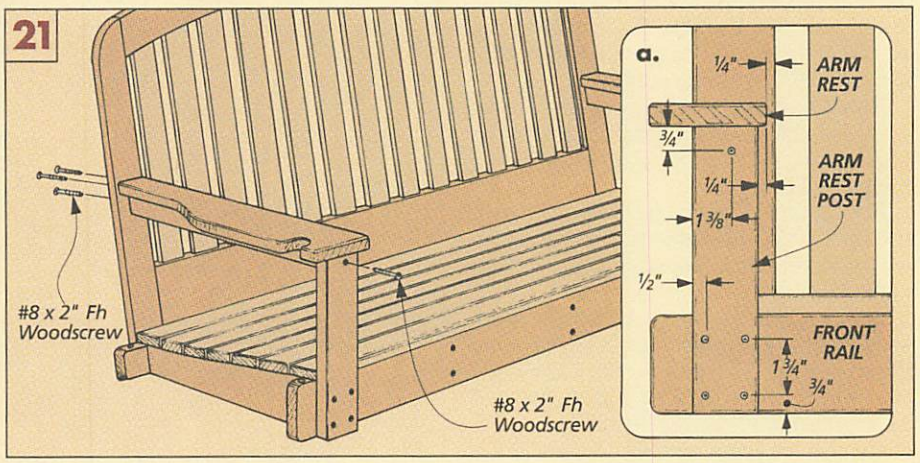

After gluing in the cross dowels, the support can be glued and screwed to the bottom of the arm rest, see Fig. 19.

Finally, this assembly can be attached to the swing, see Figs. 20 and 21a.

HANGING SYSTEM

The swing is now complete and just about ready for hanging.

Note: All the hardware, including the chain, should be available at most hardware stores. On page 31 we're offering a package of the silicon bronze woodscrews needed.

Before getting too comfortable in the swing, it's a good idea to give it a couple coats of finish, see Finish box at right.

After the finish has dried, drill a ¼" pilot hole in the bottom of the notches that were cut earlier in the arm rest, see Fig. 22a. Then install a screw eye in the pilot hole.

A second screw eye can then be installed the same way in the back stile, see Fig. 22.

Finally, the swing is ready to be hung when the eye bolts have been installed in the seat rails, see Fig. 22.

What's the best height to hang the porch swing? Here you'll have to experiment. Just keep in mind that the swing should be suspended high enough that your feet don't drag as you swing. And low enough that you can still push off with your toes.

Also, by hanging the swing so the front is higher than the back, you won't feel like you're being pitched out as you swing forward, see detail drawing on page 7. ❑

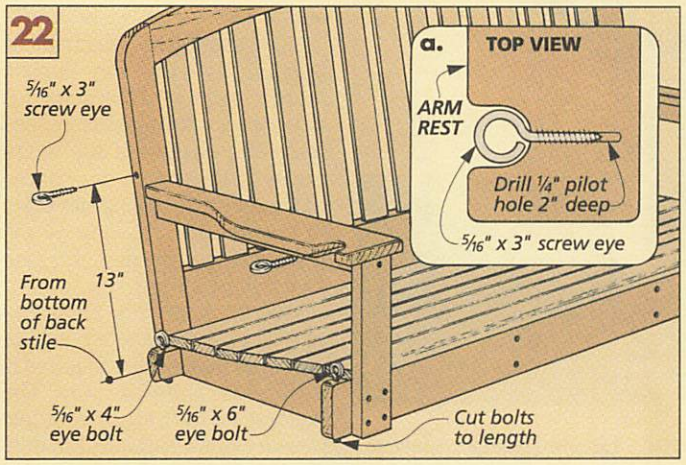

FINISH

Any project that will spend time outdoors needs a weatherproof finish. An exterior paint or spar varnish would give the protection needed. But *no* outdoor finish will last forever, so for the porch swing I chose a finish that was easy to renew.

The product I used is called General Finishes' Outdoor Oil, a tung oil with UV and mildew inhibitors.

MATERIALS

A	Front Seat Rail (1)	¾ x 3½ - 58¾
B	Rear Seat Rail (1)	¾ x 1⅞ - 58¾
C	Seat Supports (5)	¾ x 3½ - 16
D	Seat Slats (7)	¾ x 2¼ - 55¾
E	Back Stiles (2)	¾ x 2¾ - 25
F	Lower Back Rail (1)	¾ x 5¾ - 53
G	Upper Back Rail (1)	¾ x 6½ - 53
H	Filler Strips (30)	⅜ x ½ - 1¼
I	Back Slats (14)	⅜ x 2¼ - 17½ rgh.
J	Arm Rest Posts (2)	¾ x 2¼ - 11
K	Arm Rests (2)	¾ x 4 - 21
L	Arm Rest Suprts. (2)	¾ x 1½ - 19⅛

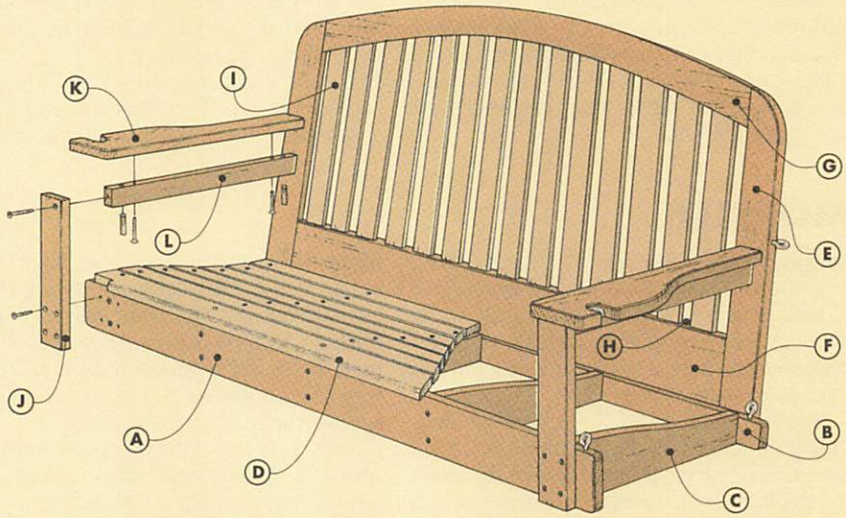

CUTTING DIAGRAM

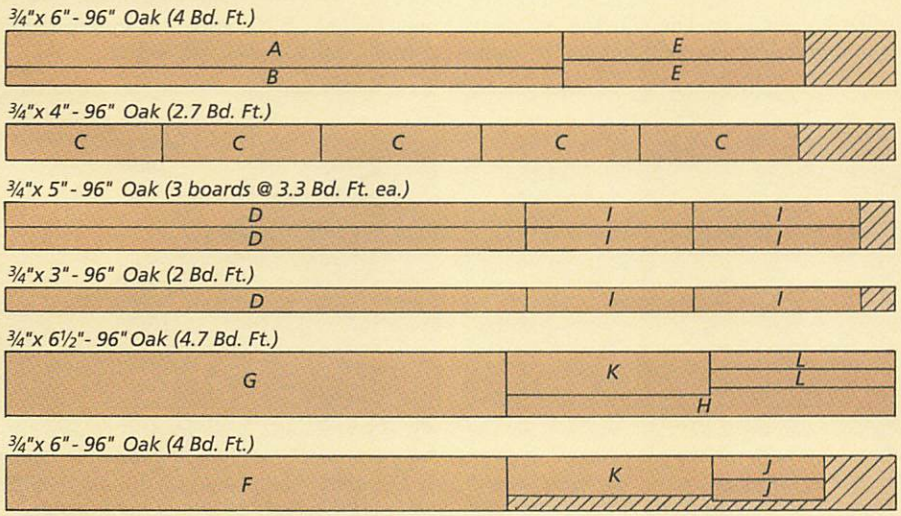

SUPPLIES

- (8) #8 x 1¼" Fh Bronze Woodscrews
- (55) #8 x 1½" Fh Bronze Woodscrews
- (17) #8 x 2" Fh Bronze Woodscrews
- (2) 5/16" x 4" Eye bolts
- (2) 5/16" x 6" Eye bolts
- (4) 5/16" Hex nuts
- (4) 5/16" Washers
- (4) 5/16" x 3" Screw eyes
- 2/0 Tenso chain
- (4) Chain connectors
- (2) ¾" S-hooks

Mortise & Tenon

A mortise and tenon joint falls into that category of "inventions that civilizations are built on." You know, like the wheel, the lever, and the inclined plane.

Okay, maybe I'm exaggerating a bit, but in the woodworking shop, there isn't any joint that's as versatile and strong as the mortise and tenon.

VERSATILE. The mortise and tenon typically joins pieces at right angles. So it's a simple solution for many woodworking applications. Like when you're building a frame. (In this issue I used mortise and tenon on both the hall mirror and the back of the porch swing.) Or when connecting two legs with a stretcher (like a table or chair).

And for special applications, the mortise and tenon has a number of variations. For instance, there are through, twin, and keyed mortise and tenons. But these don't require new skills. They simply apply the basic joint to a new situation.

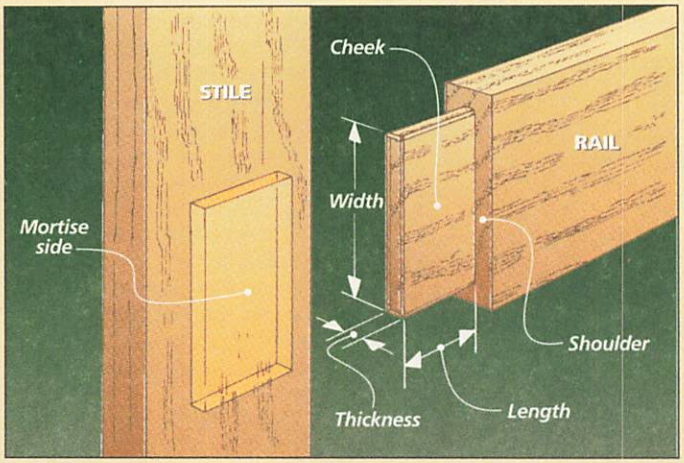

MECHANICAL STRENGTH. Besides being versatile, the mortise and tenon is strong. The obvious reason for this is mechanical. The tenon fits into the mortise like a handle in the head of a hammer.

To maximize this strength, I follow the "one-third rule." The thickness of the tenon is one-third the thickness of the mortised workpiece. This way, each side of the mortise is as thick as the tenon. There's no "weak link."

GLUE STRENGTH. Mechanical strength isn't the only thing a mortise and tenon has going for it. It's a very strong *glue* joint as well. The cheeks of the tenon create large face grain surfaces that contact the face grain sides of the mortise. As long as the mating pieces fit snug, the glue joint will be strong.

EASY TO MAKE. For as strong as it is, a mortise and tenon joint is easy to make. All it requires is a drill press and a table saw. The hardest part is cutting multiple mortise and tenon joints all identical so they make a square frame.

The trick here is to follow a certain procedure and to use standard settings to minimize any variations between the joints. Fences, stop blocks, and featherboards also come in handy to make the procedure more like production work.

MORTISE

I always drill the mortise first. Then cut the tenon to fit. A mortise is limited by the size of your drill bits. But you can sneak up on the size of the tenon with the table saw. And it's easier to shave a tenon smaller than it is to chop a mortise bigger.

But even though I drill the mortise first, I lay it out based on the finished size of the tenon. And since a tenon that's centered on the thickness of a workpiece is easier to cut, I usually center the mortise as well.

SET FENCE. A centered mortise is a simple operation on the drill press. Start by adding a fence so the workpiece is roughly centered under the bit. Then set the depth of the hole. I always drill the hole a little deeper than the finished length of the tenon. This way, the shoulders of the tenon pull tight against the mortised workpiece.

Shop Tip: To set the bit dead center, start with a piece of scrap that's the same thickness as your workpiece, see Step 1 below. Drill a shallow hole. Then flip the test piece around and drill a second hole in the same location. If necessary, adjust the fence and repeat the procedure. When the two holes align, the bit will be perfectly centered.

DRILL MORTISE. To drill the mortise, start with the end holes, see Step 2. Note: I drill these holes just inside the lay-out lines.

The next step is to remove the waste between the end holes and clean the sides, see Step 2 and the box on the next page.

CLEAN MORTISE. When the mortise has been drilled, all that's left is to square up the corners with a chisel, see Step 3.

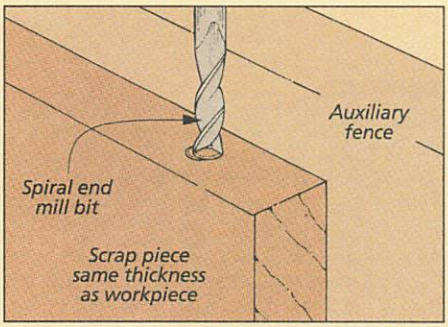

1 *Use a piece of scrap to center the bit. Place the scrap against the fence and drill a shallow hole. Then flip it around to see if the second hole matches the first.*

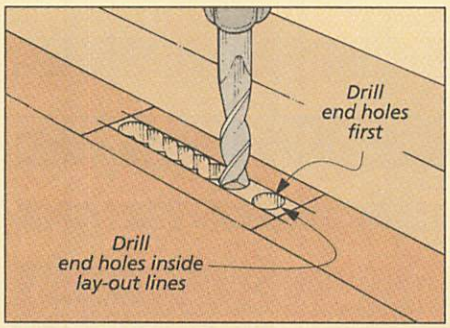

2 *First drill the end holes and remove the waste with overlapping holes. To clean the sides, lower bit in 1/4" increments and slide piece back and forth, holding it firmly.*

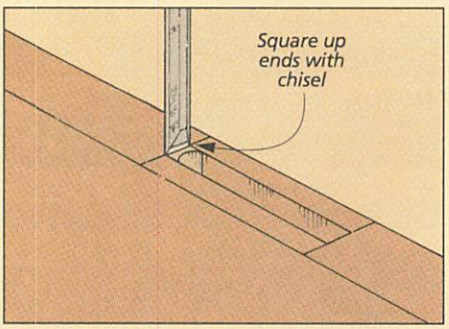

3 *If you want a mortise with square corners, start by chopping straight down at the ends. Then clean up the corners by paring down on the sides of the mortise.*

TENON

With the mortises drilled, it's time to cut the tenons. Cutting them on the table saw allows you to sneak up on the final size of the tenon. The miter gauge with an auxiliary fence helps support the workpiece and prevent chipout, and the rip fence acts as a stop for cutting the tenon to desired length.

TWO STEPS. Unlike the mortise, the tenon is cut in two steps. First the cheeks of the tenon are formed, see Steps 1-4. Then when a corner of the tenon fits into the mortise, the next step is to cut the tenon to width.

PROCEDURE. The procedure for both of these steps is the same. First, set the height of the blade, see Steps 1 and 5.

Next make two test cuts, flipping the piece between passes. Shop Tip: I test the cuts only on the very end of the workpiece, see Steps 2 and 5. This way, if the cuts are off, they can be corrected without having to make another workpiece.

When each test cut fits, the rest of the tenon can be cut, see Steps 4 and 5.

ASSEMBLY TIPS. If you have problems getting the joint together, there are some things you can do, see Step 6. First to allow the tenon to slip more easily into the mortise, I chamfer the ends of the tenon.

Also, if there are gaps between the pieces when they're assembled, you can often get a tighter fit by undercutting the shoulders of the tenon with a chisel.

Finally, to avoid any messy squeeze-out, I apply glue only to the cheeks of the tenon near the ends. The glue will get spread out as the tenon is pushed into the mortise. ❑

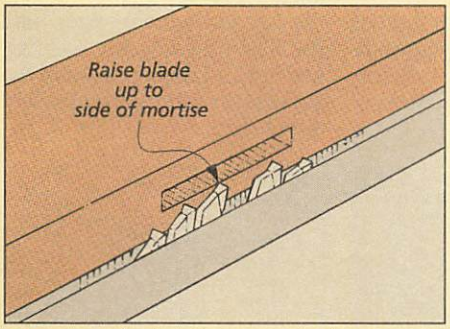

1 *To set the height of the blade, place the mortised piece flat on the table. Raise the blade so the highest tooth lines up with the side of the mortise.*

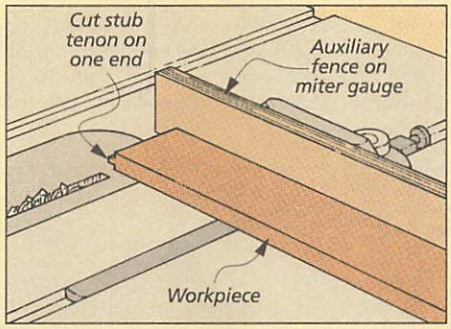

2 *Test the setup by cutting a "stub" tenon on the end of the workpiece. Then with an auxiliary fence attached to the miter gauge, make one pass for each cheek.*

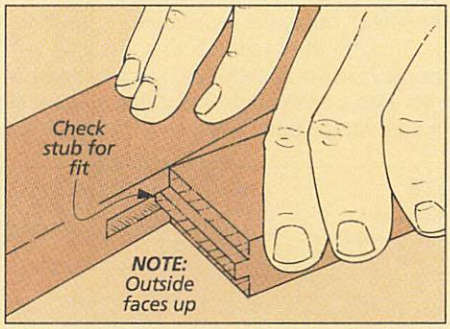

3 *Now see if the stub tenon fits in the mortise. (Make sure the outside faces of both pieces are up.) If it's too tight, raise the blade slightly and test the fit again.*

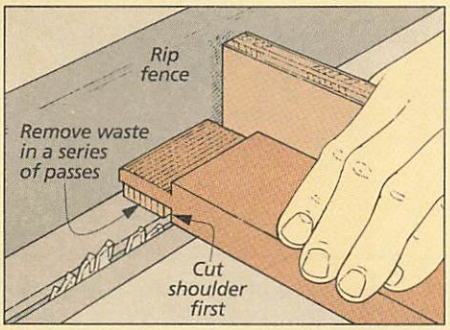

4 *Set the rip fence so the distance to the outside of the blade equals the length of the tenon. Then cut the shoulder and make repeated passes to remove the waste.*

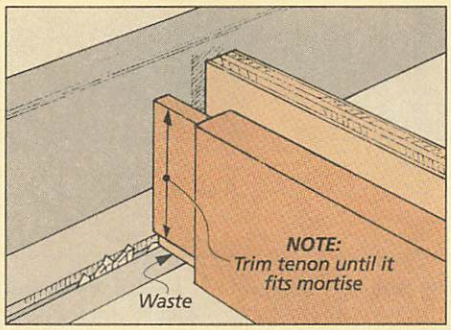

5 *To cut the top and bottom edges, turn the workpiece on edge and sneak up on the cuts until the width of the tenon matches the length of the mortise.*

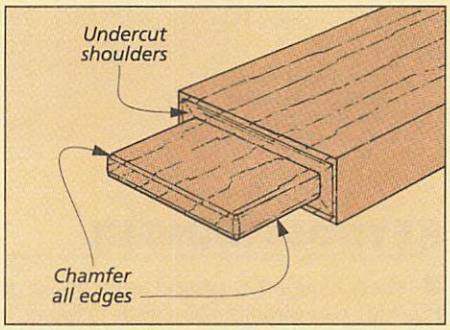

6 *To allow the tenon to slip into the mortise and provide room for excess glue, chamfer all the edges. Plus, undercut the shoulders with a chisel to ensure a tight fit.*

SPIRAL END MILL BIT

A spiral end mill bit is specially designed to cut mortises. (For sources, see page 31.) Its spiral cutting edge has an "up-cut" design. So unlike Forstner bits, the chips are pulled up out of the mortise. This eliminates heat build-up and clogging. But the longer cutting edge also makes for a cleaner cut, so the sides of the mortise end up smooth.

A clean cut is also the result of higher speed. Because these bits are designed to run in a router, I set the drill press at its highest speed setting (between 3000 and 5000 RPMs).

PROCEDURE. Drilling a mortise with an end mill bit is just like drilling one with a regular drill bit. First drill the holes at each end. Then drill overlapping holes between them.

But to clean up the sides of the mortise, the end mill bit has a definite advantage. As a router bit, it's also designed to cut side to side. So you can slide the workpiece "through" the bit.

A couple words of caution. Don't clean up the entire face of the sides at one time. Instead, lower the bit ¼" and slide it back and forth. Then lower the bit another ¼" and so on. Also, be sure to keep a firm grip on the workpiece when sliding it sideways. The mill bit can grab a little as it removes the waste.

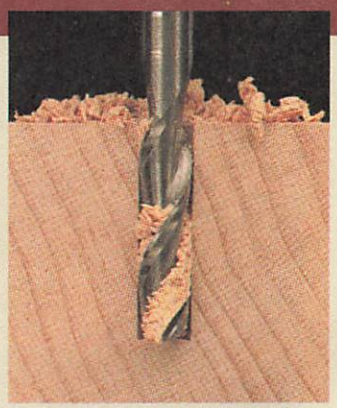

Shop Notes

OFF-CENTER TENONS

■ The back of the porch swing is held together with mortise and tenon joints. But the tenons on the upper back rail weren't built with the usual procedure.

Actually, they started out normally. I cut the cheeks of the tenons with a dado blade and miter gauge on the table saw.

But the top and bottom edges of the tenon can't be cut with the table saw. The problem is the size of the rail. It's extra wide (tall) to allow for the curve, see Fig. 1. This means the top of the tenon is 4" from the top of the blank. But an ordinary table saw blade can only be raised 3½".

There's a simple solution, though. Cut the top and bottom edges the old-fashioned way: with a hand saw.

The first step is to lay out the top and bottom edges of the tenons, see Fig. 1. These dimensions can be taken directly from the mortise.

Next, remove most of the waste with a hand saw, see Fig. 2. But stay outside the lay-out lines. Then use a chisel to trim the top and bottom edges until the tenon fits into the mortise, see Fig. 3. Finally, clean up the shoulders so the stile pulls tight to the rail.

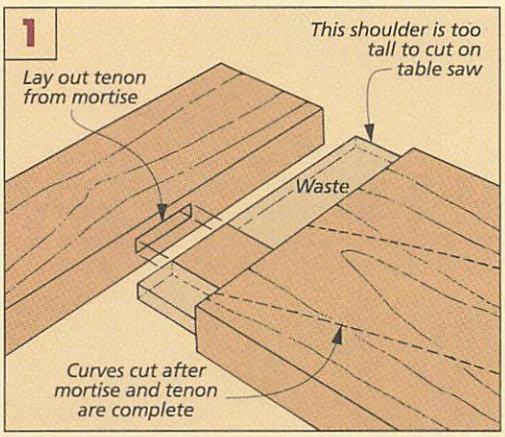

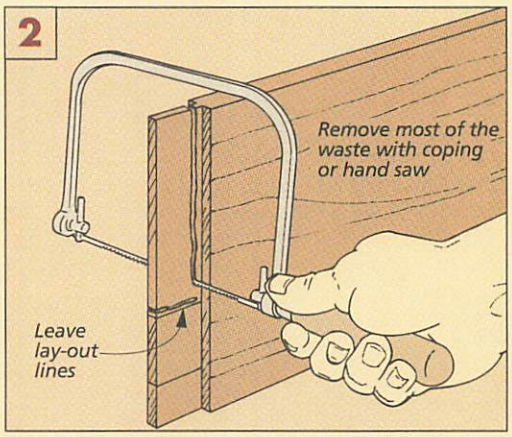

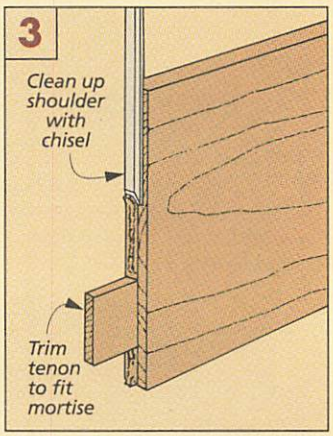

KEYHOLE HANGER

■ When hanging a project on the wall, you want to make sure it's secure — especially if you expect it to hold heavy objects. So to hang the hall mirror (page 18), I used two keyhole hangers.

This hanger is a steel plate with a keyhole slot and two holes for screws, see Fig. 3. The plate sits in a mortise in the back of the frame, and the keyhole "locks" on the head of a screw that's fastened to the wall.

The trick to creating room for the head of the screw is to drill a mortise inside a mortise. This is easier than it sounds. All it requires is drilling four holes: two shallow outside holes and two deeper inside holes.

First, draw a centerline on the back of the frame and trace the position of the hanger, see Fig. 1. Then drill two ⅛"-deep holes at the outside. These holes create the mortise that holds the hanger plate.

Next drill overlapping ⅜"-deep holes between the mortise holes, see Fig. 2. These overlapping holes create clearance for the roundhead screw. But before you can actually set the plate into the mortise, you'll need to clean up the sides of the mortise with a chisel.

Finally, drill the pilot holes and screw the hanger in place, see Fig. 3. Now the hall mirror is ready to be hung on the wall.

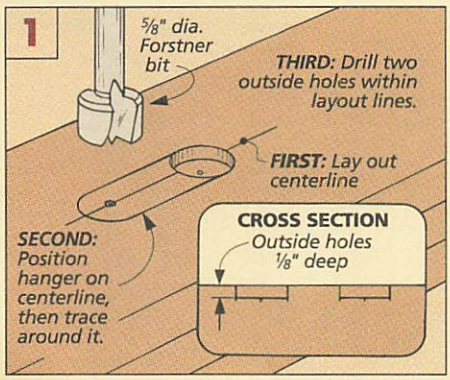

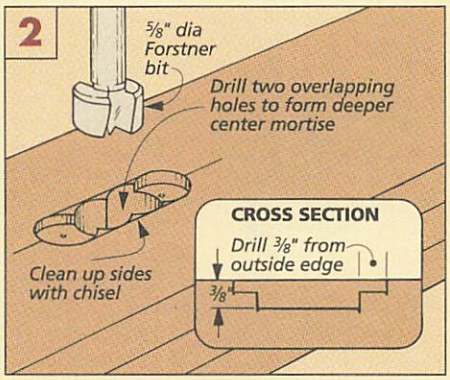

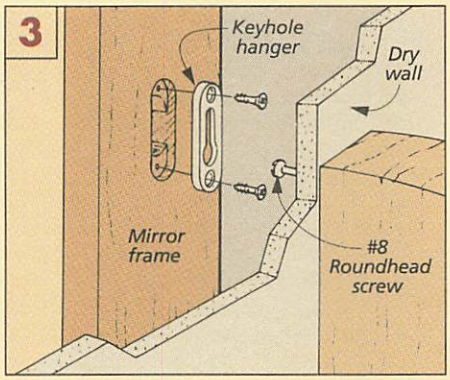

PARALLEL CURVES

■ The curved rail on the back of the porch swing is a nice touch. But making the top and bottom curves parallel was a problem.

TOP CURVE. The top curve is quite large, but it's easy to lay out. The only thing unusual is that it spans across three pieces. So first, I dry assembled the rails and stiles, see Fig. 1. Then to form the curve, I used a long strip of ¼"-thick Masonite.

ENDS. The curve should end 4" down from the top edge of the assembly. To hold the Masonite strip in place, add two nails near the outside edges.

CENTER. The center of the curve is held in place with a simple wooden block. Center the block on the top rail and clamp it in place so the top of the Masonite strip is flush with the edge of the rail blank.

Now the curve can be drawn, following the top edge of the Masonite. Then the next step is to cut the curve and sand it smooth, see Fig. 2.

BOTTOM CURVE. With the top curve complete, I had to figure a way to draw the bottom one so it was parallel with the top. To do this, I used a simple scribing jig.

SCRIBING JIG. This jig is a scrap piece of Masonite and two finish nails, see Fig. 3. (It's a good idea to drill pilot holes for the nails so the Masonite won't split.)

Set the jig on the upper back rail with the finish nails resting against the top curve. Then trace this curved edge on the *underside* of the jig, see Fig. 4.

TRIM TO FIT. Next measure down 2¾" from the center of the curve and cut the scribing jig to this length, see Fig. 5.

DRAW CURVE. At this point, the bottom curve can be laid out. Simply scribe a line as you slide the jig along the top edge of the rail, see photo above.

Now you can cut and sand the bottom curve to shape just like the curve on top.

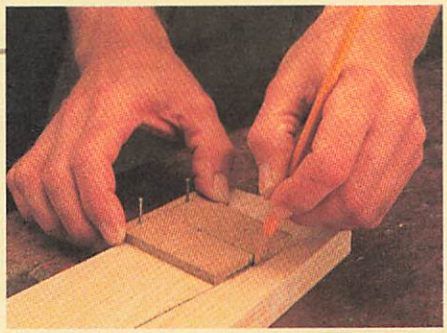

▲ *A couple nails and a scrap piece are all that's needed to lay out a curve that's perfectly parallel to an existing curve.*

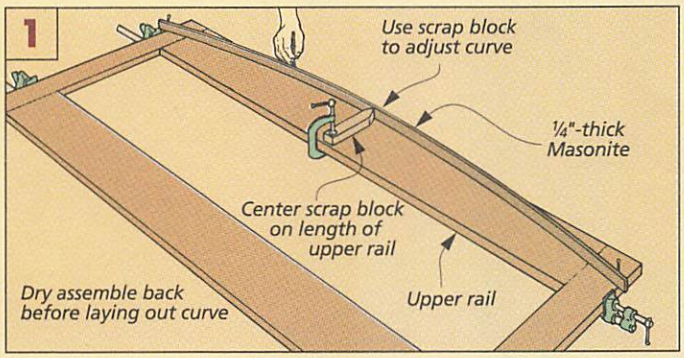

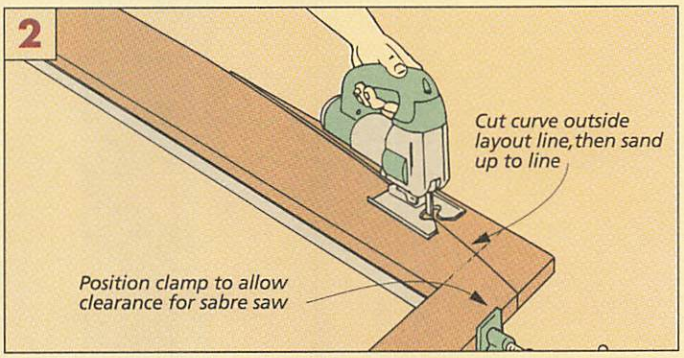

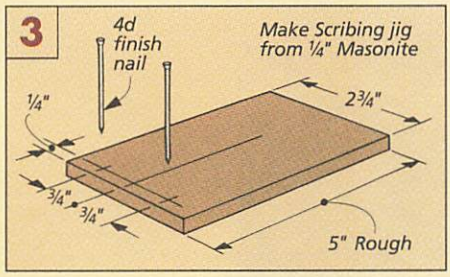

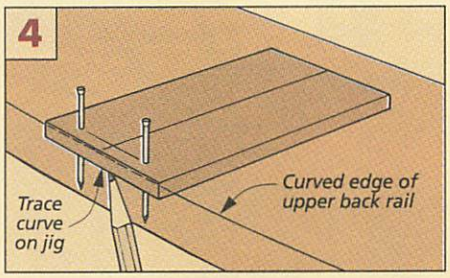

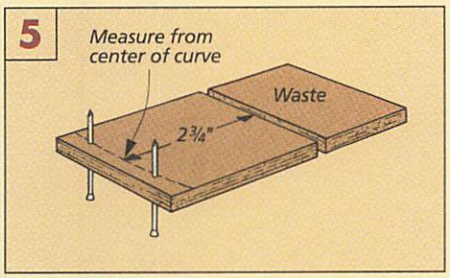

CHAMFERING A DOWEL

■ For the tool tote on page 26, I used the router table to chamfer the ends of the dowel handle.

First install a chamfer bit in the router and raise it so the cutter is ⅛" above the table.

Then to prevent kickback, I created a "channel" that holds the dowel. This is done by capturing the dowel between the fence and a scrap piece clamped to the table, see drawing.

To chamfer the dowel, feed it into the bit until the end hits the bearing. Then simply rotate the dowel and pull it back.

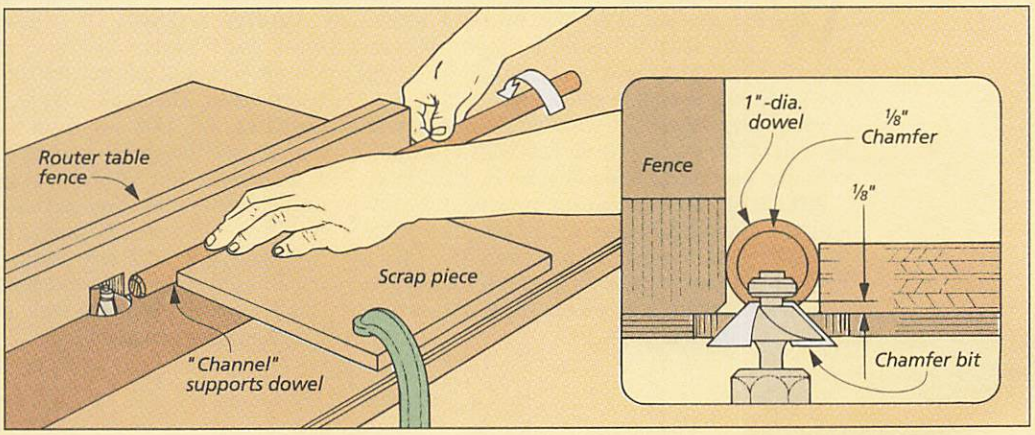

Hall Mirror

There's nothing complicated about building this mirror. With its straight-forward design and basic joinery, you can build it in a weekend.

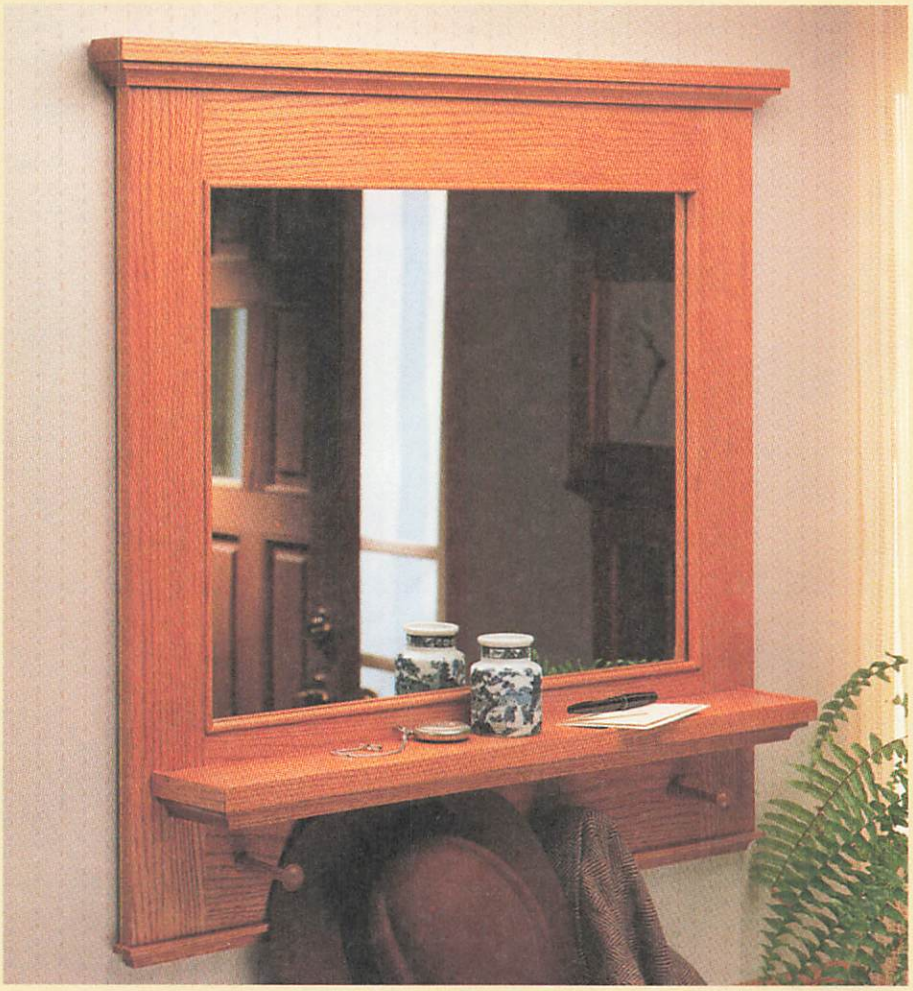

When designing this hall mirror, I decided right away it should be more than just something good to look at. It should be useful, too. So I made a couple additions.

PEGS. First, there are some Shaker pegs at the bottom of the frame. These can hold a hat and a coat that haven't quite made it to the hall closet.

SHELF. Another design improvement was the addition of a shelf. It runs almost the full width of the frame and has a tiny lip around its edges to help keep things from sliding off. This makes the shelf a great place to store car keys, letters to be mailed, or spare change.

MORTISE & TENON. Of course, all these features don't amount to much if the frame isn't strong. So I built this hall mirror with mortise and tenon joints. This makes it plenty strong but still easy to build. (For more on mortise and tenon joinery, see the article beginning on page 14.)

HANGERS. But strong construction isn't the only consideration. You still have to hang it on the wall. To make sure this mirror is secure, we used keyhole hangers. These metal hangers are mortised into the frame for extra strength, and they "lock" over screws in the wall. (For more on keyhole hangers, see page 16.)

FRAME ASSEMBLY

The hall mirror is basically a simple rectangular frame. This frame consists of two stiles (the vertical pieces) and two rails (the horizontal pieces) held together with mortise and tenon joinery. And to dress up the overall appearance of the frame, decorative molding is added to the top and bottom, see drawing at right.

STILES & RAILS. I started work on the frame by making the **stiles (A)**. Both stiles are cut to the same finish size, see drawing at right. And like the other parts of the frame, they're cut from ¾"-thick stock.

With the stiles cut to size, work can begin on the rails. The **top rail (B)** and **bottom rail (C)** are the same overall length (25⅜"). However, their widths are different. The top rail (B) is the same width as the stiles (3"). But to allow room for the shelf and pegs (installed later), the bottom rail (C) is 6½" wide, see drawing.

MORTISE & TENON. At this point, you can cut the mortise and tenon joints that hold the parts together, see details a and b at right. (For a step-by-step article on creating mortise and tenon joints, refer to page 14.) When the mortise and tenons are complete, glue and clamp the stiles and rails together to form the frame.

RABBET. After the glue has dried, the next step is to rout a rabbet in the back of the frame for the mirror to sit in. To do this, I used a ⅜" rabbet bit in a hand-held router, see Fig. 1.

Shop Note: The rabbet on the frame is ⅜" deep. This allows plenty of room for the thickness of the mirror and a posterboard back. But ⅜" is too much stock to remove in a single pass (especially with a hard wood like oak). The wood tends to chip out instead of cutting smoothly. So it's a good idea to make a couple of passes around the frame to get the recess to its final depth.

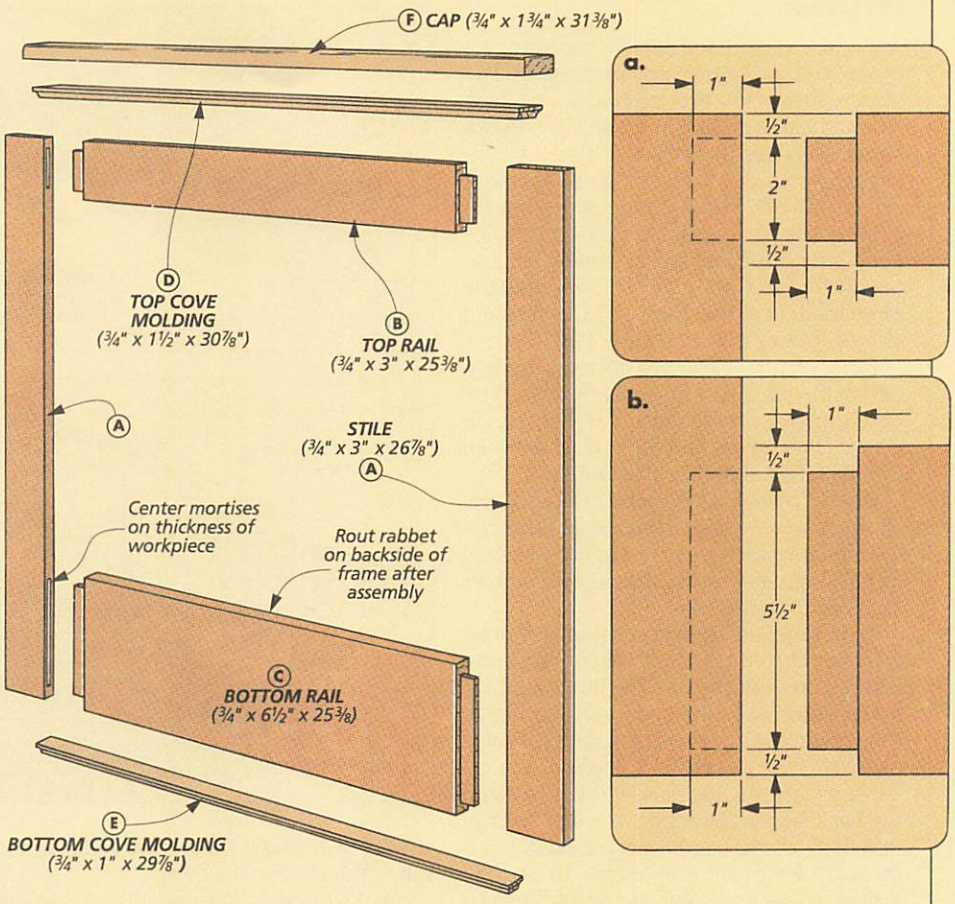

Although a rabbet bit does a good job of routing the rabbet, it leaves a radius in each corner. Since mirrors don't typically have round corners, you'll have to square up the inside corners of the rabbet with a chisel.

COVE MOLDING. Once the rabbet is complete, the next step is to add cove molding to the top and bottom of the frame. To make the molding, first cut the **top cove molding (D)** and **bottom cove molding (E)** to finish size, see drawing above.

Now the profile can be routed on both pieces of molding. To do this, I used a ½" cove bit in the router table. Shop Tip: It works best to start on the ends first. That way, any chipout (even if you use a backing board) will be cleaned up when you cut the cove along the front edge. And just like cutting the rabbet on the back of the frame, it's a good idea to cut the cove profile on the molding by making a couple of passes.

After routing the coves, both pieces of molding can be glued and clamped to the frame. Note: The molding is installed on the frame centered from side to side and flush with the back. A quick way to center the molding is to mark the center on both the top and bottom of the frame and on each piece of cove molding. Then just align your marks when clamping the molding in place.

CAP. To complete the frame, a **cap (F)** is installed on the top cove molding, see Fig. 2. This cap is a piece of ¾"-thick stock with a ⅛" roundover routed along the top front edge and both ends, see drawing and Fig. 2.

With the roundover complete, the cap can be glued and clamped to the top cove molding. Here again, position the cap on the cove molding so it's centered from side to side and flush with the back.

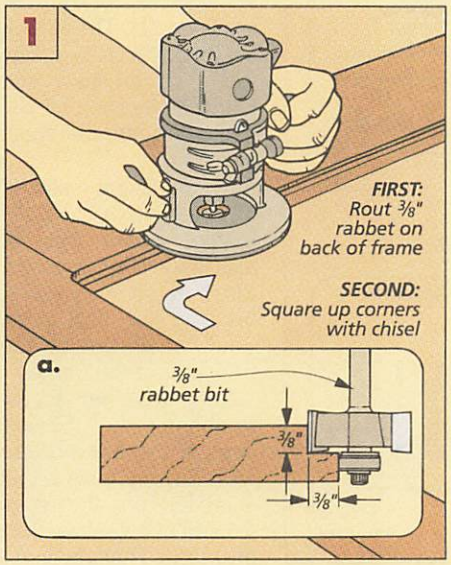

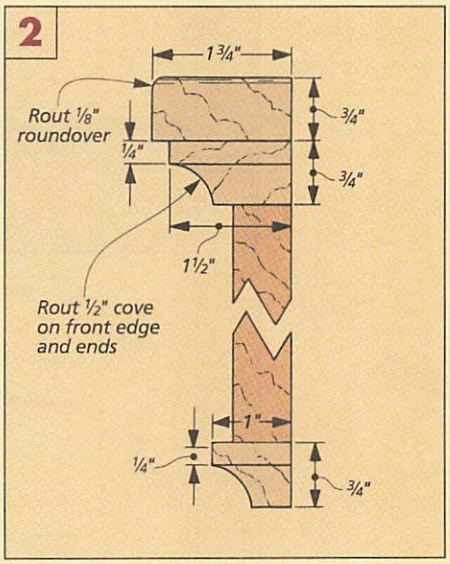

SHELF

After the cap has been installed on top of the frame, you can begin work on the shelf. The shelf consists of two pieces of ¾"-thick stock glued together to form a 1½"-thick blank. Keeping the edges of these pieces aligned while they're being glued together can be difficult. When clamping pressure is applied, the pieces tend to slide on the slippery glue. So I started by gluing up two oversize pieces (4" x 28"). Then after the glue dried, I cut the **shelf (G)** to a finished size of 3¾" x 27⅜", see Figs. 3 and 3a.

Next, rout a decorative cove on the bottom of the shelf, see Fig. 3a. It matches the cove molding on the top and bottom of the frame. Once again, rout the ends of the shelf first and then along the front edge.

INSTALLATION. After routing the cove, the shelf can be attached to the frame. What can be a little tricky here is mounting the shelf on the front side of the frame with screws installed from the back.

To help get the shelf in position, first draw a lay-out line on the front side of the frame where you want the shelf to be located (1" down from the frame opening), see Fig. 4. Then align the shelf with the line and use a couple of clamps to hold it in place.

Now mark the location of the screws on the back side of the frame, see Fig. 5. Then drill the 3/16"-dia. counterbored shank holes through the frame only. Note: To prevent drilling these holes into the shelf, I used a depth stop on the drill bit.

With the shelf still clamped to the frame, the shank holes can be used as guides for drilling ⅛"-diameter pilot holes into the shelf. Then remove the clamps and glue and screw the shelf to the frame.

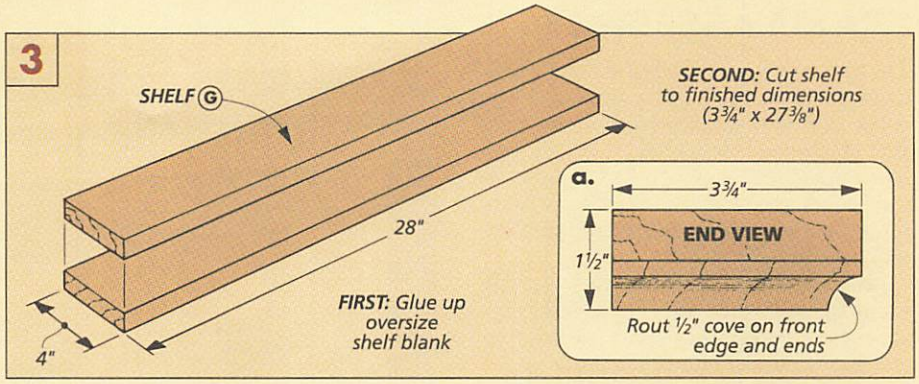

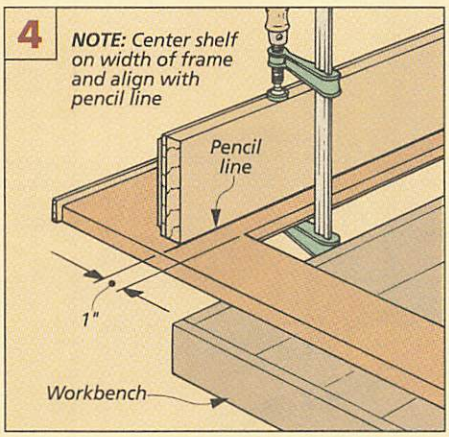

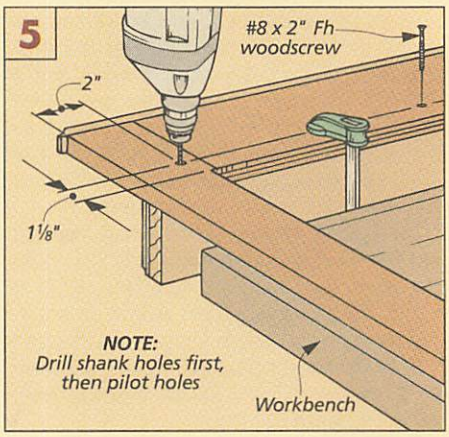

BEAD MOLDING. Now bead molding can be added to the front and sides of the shelf to form a lip around the edge. The molding is a decorative detail that keeps things from sliding off, see drawing at bottom left. At the same time, bead molding can be added to the inside of the frame next to the mirror.

The **shelf bead molding (H)** and the **mirror bead molding (I)** are made the same way. But they're different widths. The shelf molding is ⅞" wide while the mirror molding is ½", see Figs. 6a and 6b. To create the beading, I used a ⅛" roundover bit in the router table.

PEGS. With the molding installed, the next step is to add Shaker pegs to the frame (for sources, see page 31). The easiest way to do this is to lay the frame on its back and mark the location for the four pegs under the shelf, see Fig. 7.

Then using a Forstner bit in a hand drill, the flat bottom holes can be drilled for the pegs. (A Forstner bit works best because the drill point won't break through the back side of the frame.)

Shop tip: When dry assembling the Shaker pegs in the holes, there was a small problem. The shoulder on the pegs wouldn't sit flush against the frame. That's because

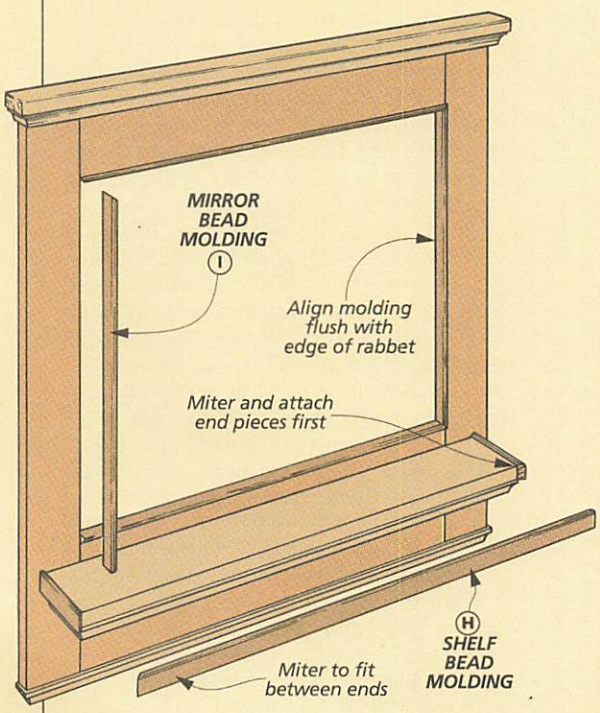

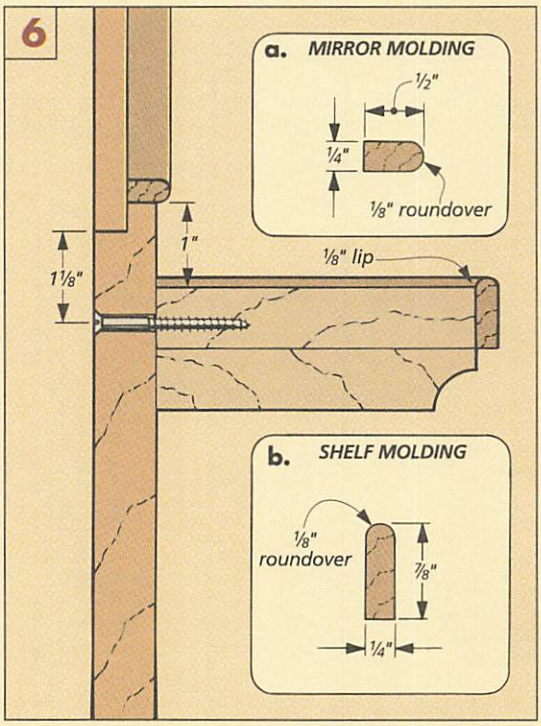

each of the pegs had a small radius under the shoulder, see Fig. 7a. To solve the problem, I drilled a small countersink around the face of each hole. This countersink provides just enough clearance for the radius, and the pegs sit flush. Then glue and install the pegs in the frame.

HANGERS. When you combine the weight of the frame, the mirror, and several coats on the pegs, you want a secure way to mount the mirror on the wall. That's why metal keyhole hangers were added to the back side of the frame, see Fig. 8. These hangers are designed to be mortised and screwed to the frame (refer to page 16 for cutting the mortises). And the keyhole slot in each hanger "locks" the frame to the screw in the wall.

MIRROR INSTALLATION. After the hangers are installed the last step is fitting the mirror to the frame and holding it in place. The frame was designed to hold a standard 1/8"-thick mirror cut to an even size (18" high x 24" long). But just to be safe, it's a good idea to take the frame along with you when buying the mirror to make sure it fits.

To hold the mirror in the frame, I used a tip sent in from one of our readers (refer to Tips and Techniques in *Woodsmith* No. 95). I drilled holes for four fender washers and panhead screws positioned 6" in from each side, see Fig. 9.

But before actually installing the mirror, it's a good idea to apply your stain and finish, see Finishing box below. Then install the mirror in the frame and back it up with a piece of posterboard. The posterboard helps protect the finish on the back of the mirror from getting scratched by the washers. Finally, install the fender washers and screw them in place on the frame. ❑

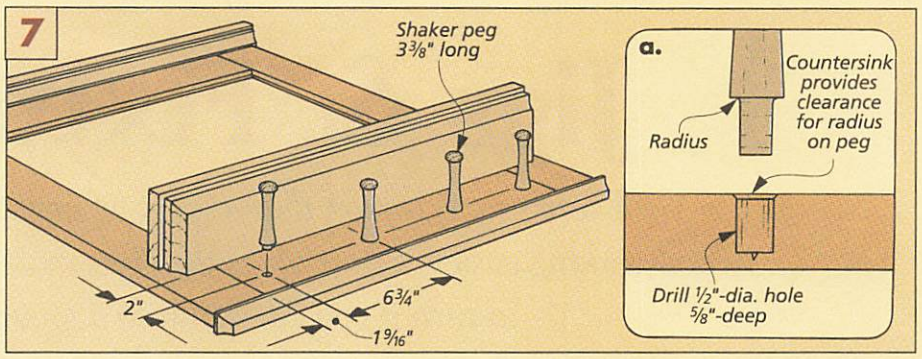

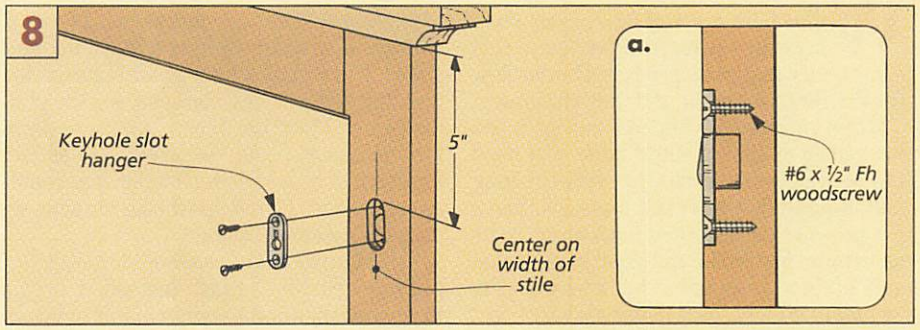

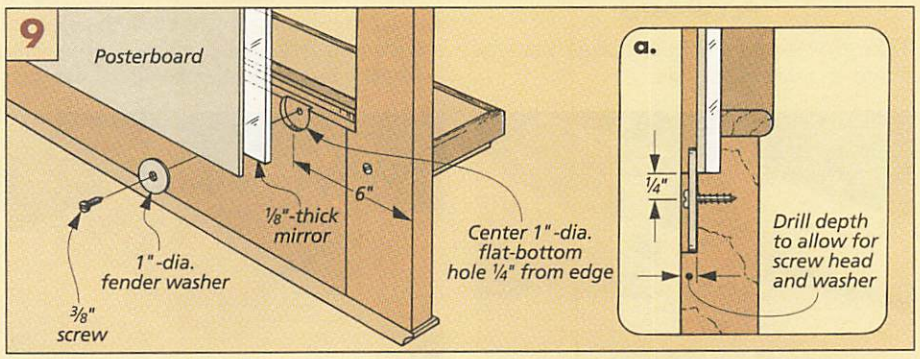

MATERIALS

A	Stiles (2)	3/4 x 3 - 26 7/8
B	Top Rail	3/4 x 3 - 25 3/8
C	Bottom Rail	3/4 x 6 1/2 - 25 3/8
D	Top Cove Molding	3/4 x 1 1/2 - 30 7/8
E	Btm. Cove Molding	3/4 x 1 - 29 7/8
F	Cap	3/4 x 1 3/4 - 31 3/8
G	Shelf	1 1/2 x 3 3/4 - 27 3/8
H	Shelf Bead Molding	1/4 x 7/8 - 48 rgh.
I	Mirror Bead Molding	1/4 x 1/2 - 96 rgh.

SUPPLIES

- (2) Keyhole slot hangers
- (4) #6 x 1/2" Fh Woodscrews
- (4) 3 3/8"-long Oak Shaker pegs
- (3) #8 x 2" Fh Woodscrews
- (4) 3/16" x 1"- dia. Fender washers
- (4) #6 x 3/8" Panhead screws
- (1) 1/8" x 18" - 24" Mirror
- (1) 18" x 24" Posterboard

CUTTING DIAGRAM

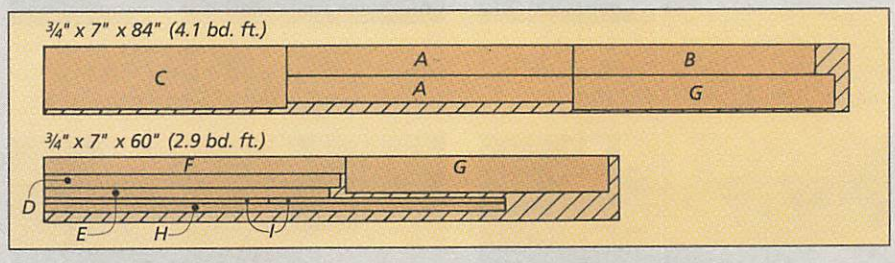

FINISHING

To make things as easy as possible while finishing the mirror frame, I used a couple of products from General Finishes.

One of the reasons I like using their products is how easy it is to touch-up a spot that shows a lot of wear (like the coat pegs). Just lightly sand the area before wiping on another coat.

To apply the finish, first wipe on a coat of Honey Maple, Sealacell finish. On top of that, I applied two coats of their Royal Finishes top coat. Shop Tip: For an extra smooth finish sand between coats with 400-grit wet/dry paper.

Jigs & Fixtures

There's no question that a good jig or fixture makes woodworking easier. But it takes the right materials and hardware to turn a good design into a great jig.

We've built a lot of jigs in our shop over the years. And I've found that using better materials produces better jigs. They're more accurate, and they last longer.

When you come to depend on a jig, like a dovetail jig or sliding cutoff table, you need it to be accurate and durable over the long haul. A jig that doesn't last for more than a few projects or becomes inaccurate costs me in time, materials, and good lumber that ends up in a scrap pile. That's why it's important to choose your materials carefully.

PLYWOOD

Take plywood for example. It's one material found on most of our jigs.

PLYWOOD. The advantage of plywood compared to solid wood is it stays flat and stable. That makes its a good material for building either a fence or base, see the photos below. Most jigs depend on these parts for accuracy. And plywood is stable. Changes in humidity don't affect it as much as solid wood. That helps the jig remains accurate long after it's built.

So will any kind of plywood do? Well, not the construction grade. Instead, I prefer hardwood plywood — either maple or birch. Unlike other plywoods, it has smooth, hard surfaces on both sides. With both sides being smooth, everything slides more easily. So there's less wear, and the jig lasts longer.

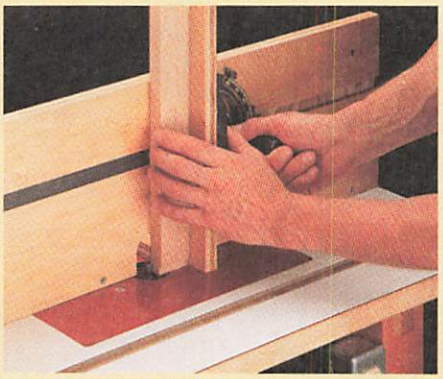

Plywood fence. *Plywood is stable — it doesn't shrink or swell. That keeps the miter gauge fitting snug in the slot.*

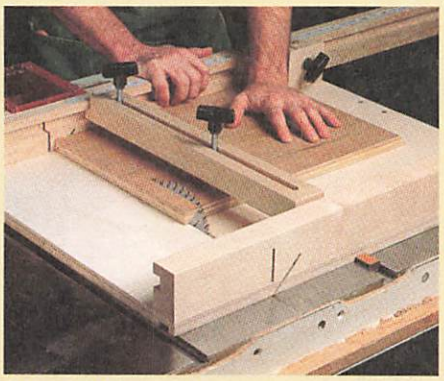

Plywood base. *Plywood is an ideal material when you need a large flat base like the one used on the sliding cut-off table.*

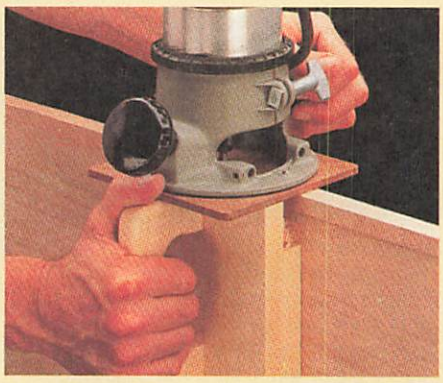

Hardboard base. *A hardboard base is strong and won't flex. And being thin, it won't limit the depth of your cut.*

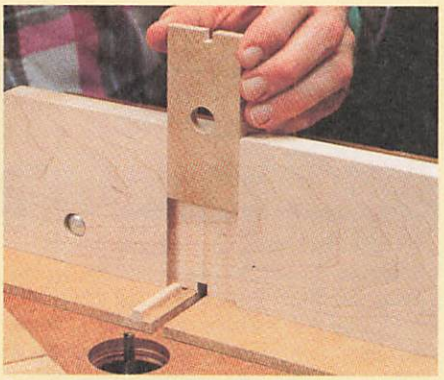

Hardboard insert. *A hardboard insert backs up the cut on the box joint jig and is easily replaced when it gets chewed up.*

HARDWOOD

Getting the most wear from a jig applies the same to hardwoods as it does for plywood. You want a wood that's strong and smooth and can take a lot of abuse. So here I'll use hard maple in most of my jigs.

WOOD GRAIN. The wood grain makes the difference. Hard maple is a closed-grain wood where the fibers are tight and dense. That makes them tough and durable.

On the dovetail jig, see photo on facing page, maple is used for the clamping bars. When the cam knobs are tightened, there's a lot of pressure on the bars (especially on narrow pieces of stock). This would bend or break many woods. But not hard maple.

That doesn't mean you have to use only maple hardwood. You could use other kinds that combine the same features. Just use a wood that's strong and smooth.

HARDBOARD

Another material that we use on many of our jigs is a processed wood product: tempered hardboard (Masonite). It's made by mixing together and heating wood fibers and synthetic resins. This mixture is then compressed into large, flat sheets.

BENEFITS. There are several advantages to using tempered hardboard. It's inexpensive, comes in uniform thicknesses (⅛" and ¼"-thick are common sizes), and it's smooth and slippery. (The resins cooked into the mixture automatically make it slick and smooth.)

JIG BASE. But there's another reason I like tempered hardboard. Even though it comes in thin sheets, it's still stiff and strong. So I'll use a ¼"-thick piece for the base on many of my jigs.

The router base for the flush trim jig is a good example, see photo at far left. Here the router needs to remain stable so the bit doesn't gouge the edging. Plus, you don't want to limit the depth of your cut with a thick base. So to solve both problems, I replace the base with tempered hardboard.

INSERTS. Of course not all the materials used on a jig last forever. Some pieces will normally get chewed-up in use (like the backing insert on a box joint jig). Since hard-

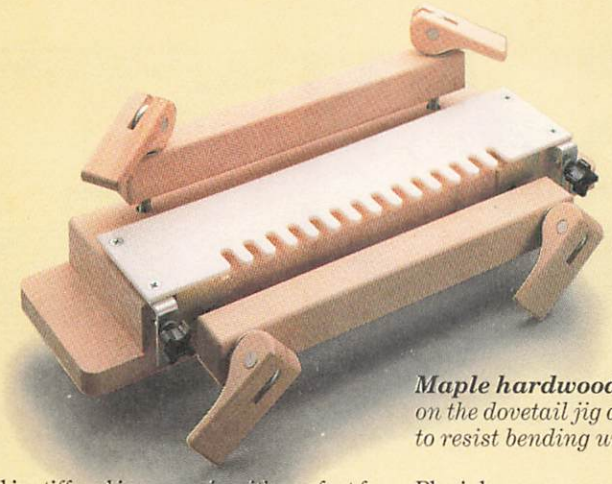

Maple hardwood. *The clamping bars on the dovetail jig are made of solid maple to resist bending under heavy pressure.*

board is stiff and inexpensive, it's perfect for making replaceable inserts.

When cut into small pieces, hardboard provides excellent support to back up a cut. On the box joint jig, these inserts are made to fit into a slot cut in the fence. So it's easy to slide out an old insert and slide in a new one. I'll make up a bunch of inserts at one time so they can be replaced as needed.

PLASTICS

In my old age I'm trying to learn some new tricks. I've found that using plastics can improve the performance of a jig. It can make a jig safer, eliminate problems of wood movement, or make a smooth surface even slicker. The nice thing is that plastics are readily available and easy to use. The ones I use all can be cut on a table saw with a carbide-tipped blade.

PLEXIGLAS. The most common plastic material that we use on our jigs is Plexiglas. It's like adding a window to a jig. It solves the problem of not being able to see what you're doing.

A good example is the sliding cut-off table, see photo below. Here, you can turn an ordinary stop block into an accurate indicator with just a small piece of Plexiglas. By scratching a thin "hair-line" mark on the Plexiglas, you can accurately set the stop block using the measuring tape.

On the same jig, there's an amber piece of Plexiglas. For me this bright color is a constant reminder to keep my hands away from the saw blade when finishing the cut.

PHENOLIC. Another plastic product that's added to some of our jigs is phenolic. The material can be cut into a small strip and attached as runner on a jig. The runner fits in the miter slot on a table saw or router table. Phenolic plastic doesn't absorb moisture, so it won't swell or shrink. That keeps a jig sliding easily year round

Phenolic, like hardboard, is also made in a two-step process. First, layers of paper are coated with a resin. Then the paper and resin are squeezed in a heated press to a uniform thickness. In the end the phenolic comes out hard and smooth.

Where this makes a difference is on a jig like the box joint jig, see photo below. Here the jig has to slide back and forth a bunch of times cutting all the fingers of the joint. A phenolic runner is used because it resists wear better than most materials.

Unfortunately phenolic isn't perfect. For one thing it's rather expensive. Second, it may be difficult to find. You can't just run down to your local hardware store to buy a piece. But you should be able to find some locally by checking the yellow pages.

PLASTIC LAMINATE. To solve the problem of availability, some jigs use an inexpensive cousin of phenolic — plastic laminate (Formica). It's made pretty much the same way but just squeezed thinner. And it's fairly common. You can find it at most home centers and hardware stores.

Just like phenolic, plastic laminate is slick and smooth. But the big advantage is you can glue it to any surface. On the sliding table, see photo, the plastic laminate was glued on top of two thin support rails.

MDF

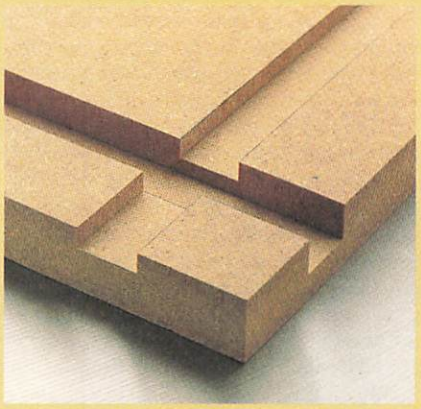

A product that's recently become more available in our area is medium density fiberboard (MDF). It's similar to tempered hardboard, but it comes in thicker sizes, see photo above. I'll use it for a base or fence. It's stable and the lack of wood grain means slots or grooves can be cut anywhere on the piece.

There are a couple of drawbacks to MDF. It's heavy — a large jig can be difficult to handle. And it's still not all that common. Around here, I buy MDF at a local hardwood lumber yard.

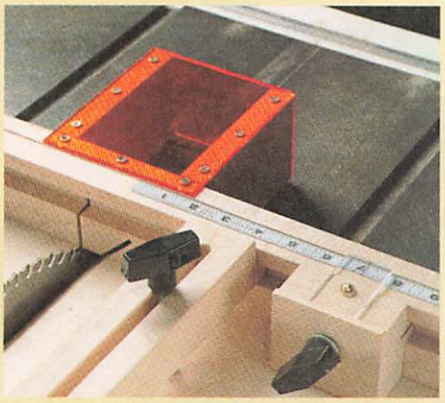

Plexiglas. *Plexiglas covers the blade on the sliding cut-off table and is used for a hairline indicator on the stop block.*

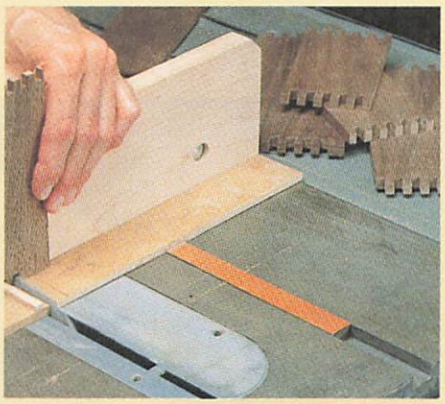

Phenolic runner. *The phenolic runner on this box joint jig is strong and stable and shows little wear from the metal slot.*

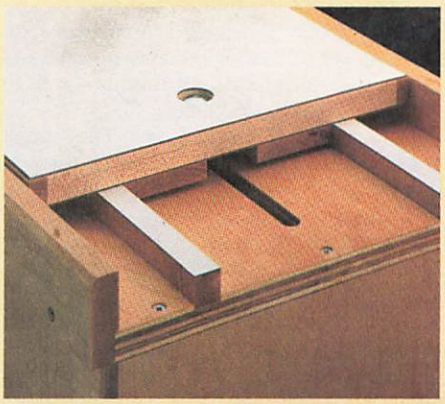

Plastic laminate. *This sliding table rides on pieces of plastic laminate — an inexpensive way to make a jig slippery.*

HARDWARE

Most jigs require some adjustment. Clamps need tightening, fences need moving, or stop blocks have to be locked in place. That's where the hardware — bolts, knobs, or inserts — really makes a jig useful.

CARRIAGE BOLTS. The most common pieces of hardware on our jigs are carriage bolts. When combined with a nut, it's a quick and easy way to hold two boards together. They come in a variety of sizes, and I'll use them when the bolt can stay in one spot (like the clamping bar on the dovetail jig, see photo at right). The advantage of a carriage bolt is the square shank below the capped head. It keeps the bolt from turning.

But they don't work all that well in plywood. It's too easy to round over the squared part of the hole. And the smaller heads can crush the plywood face or pull through if the bolt is over-tightened. To get around these problems, I'll use T-nuts.

T-NUTS. T-nuts are metal fasteners with large flanged heads. Located on the flange are raised points to spear the wood and keep the T-nut from turning. Since the flange is large, the T-nut won't crush the wood, so they work well in plywood. That's why they're used on the hold-down clamping base, see drawing of T-nut at right.

But there are other benefits. Once the T-nut is installed, it sits below the surface of the plywood so it's not in the way. This means you don't have to worry about removing it. On the hold-down jig, for instance, you can install several T-nuts in different locations around the base to make the jig more useful.

Another advantage is they're easy to install. Just drill a hole the same size as the the barrel, and drive the T-nut in place.

THREADED INSERTS. An alternative to T-nuts are threaded inserts. These are small, double-threaded pieces of hardware. On the outside are coarse threads to hold the insert in the wood. And on the inside are threads that fit a bolt or screw.

What makes them unique is they can be used to exert downward pressure. The marking gauge in the photo is a good example. It uses an insert and thumb screw to lock the steel rule in place.

But inserts do have limits. They don't work well in plywood. The outer threads don't grip the plies very well. And they can be difficult to screw into solid wood.

FLANGE BOLTS. When a piece of your jig has to slide back and forth and then be locked in place, another piece of hardware to use is a flange bolt. In my shop I use them to make adjustable stop blocks, see photo.

A flange bolt has a flattened head and slides in a T-slot. The flanged end keeps the bolt from rotating when the knob is tightened. Note: A flanged bolt is commonly referred to as a toilet bolt.

Carriage bolt

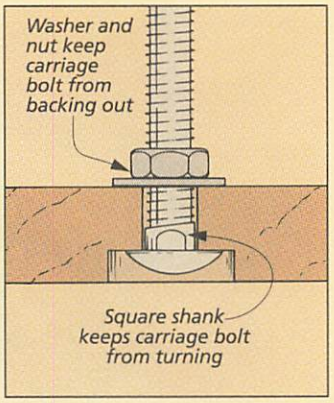

T-nut

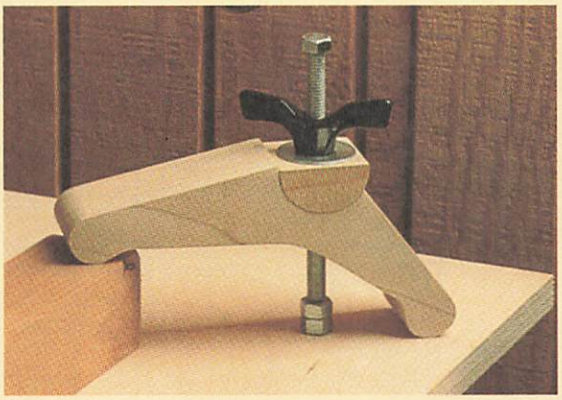

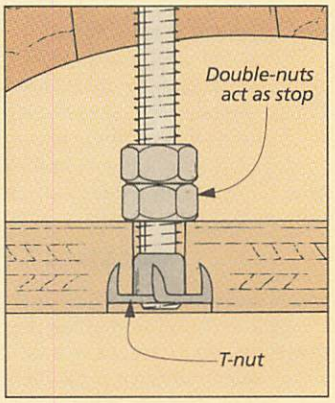

Threaded insert

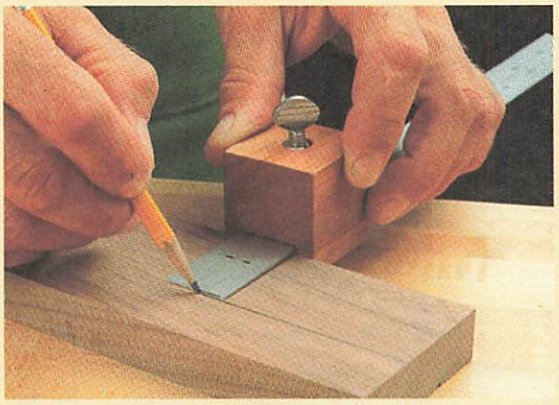

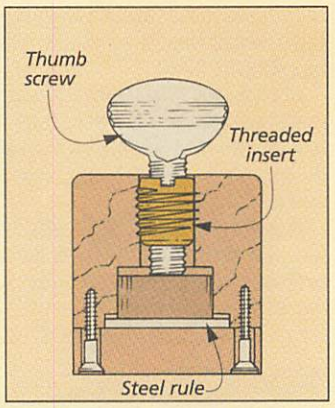

Flange bolt

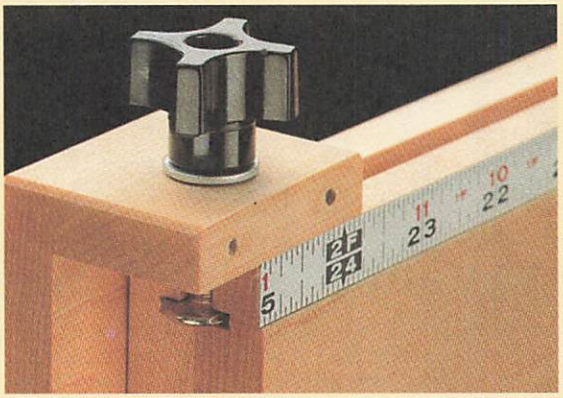

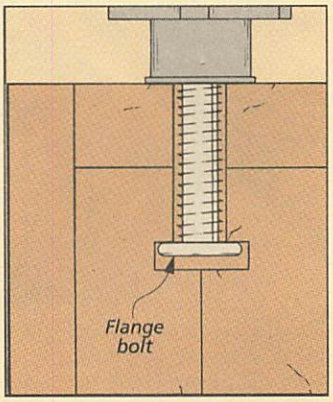

KNOBS

Sometimes it's what you add to a jig after you've built it that makes it more useful. Like adding options to a new car. For me, it's knobs (for sources, see page 31).

CAPTURED KNOB. In the past I've rapped my knuckles or banged the workpiece against the end of an exposed bolt. But now I use a captured knob to cover it up and protect my hands and workpiece.

The drawback to a captured knob is the end of the bolt can "bottom out" inside the knob. It works fine for a stop block where movement of the knob is limited. But anywhere else, the bolt could bottom out before it's ever tightened down completely.

STUDDED KNOB. Another knob I use combines a threaded stud with a knob. The stud is embedded in the knob when it's manufactured and is locked in place.

Studded knobs come in various lengths. So you need to buy a certain size knob to fit a specific location. A clamping bar would be a poor place for a studded knob. The stock you'd be clamping is always changing in thickness. The marking gauge is a better choice. The length needed to lock the rule in place never changes.

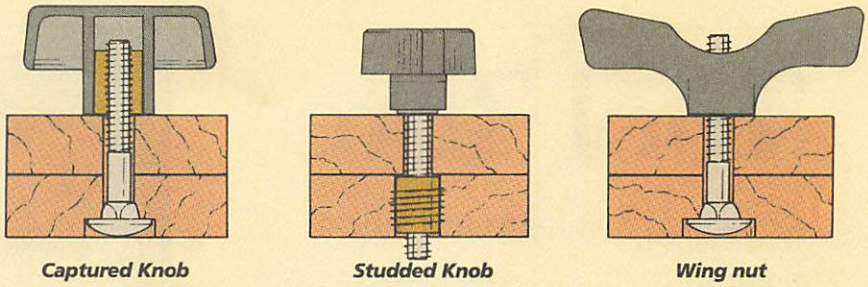

WING NUT. When I need a wide range of movement (like the clamping bar on the dovetail jig), I'll use a wing nut — not the small metal variety you usually think of, but a large plastic one. These wing nuts have a threaded insert embedded in the plastic and any length of bolt will work. The benefit here is you can really get a good grip.

Wing nuts are often used on adjustable fences. Here again it's the grip. It's easy to reach over the top of a fence and grab a large wing nut when making adjustments, see photo below left.

But there's a drawback to the large size. In tight corners, a wing nut (at least the large plastic ones) won't work. There just isn't enough room to give them a full turn.

One solution would be to use a smaller knob. But then you won't have a very good grip. So instead I'll use a ratchet knob, see photo below right. It's an adjustable knob with a large handle that can be tightened in close corners.

By lifting up on the spring-loaded handle, you ratchet the handle back and forth until it's tight. The only problem is finding them. Most of the time you'll have to order them from a woodworking catalog. ❑

Wing nut

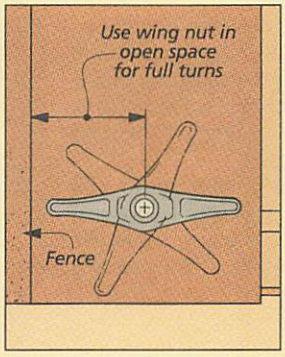

Ratchet knob

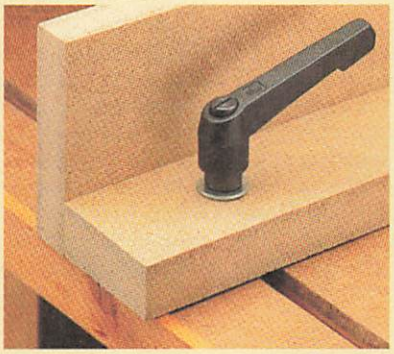

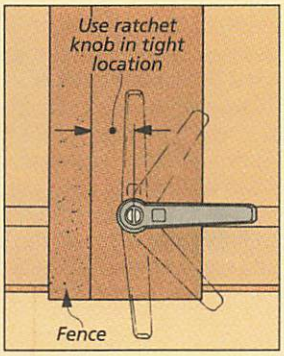

SHOP-MADE WING NUT

Using a large plastic wing nut makes it easier for me to get a good grip. Especially when tightening down the fence on a jig. But instead of going out to buy them, you can make your own using a T-nut and a piece of scrap wood.

Start with a ¾"-thick block of wood, see Fig. 1. I'll use a piece about 4" long. But since you'll be making it to fit your hand, pick whatever length you need for a comfortable grip. Use a scrap piece with a tight wood grain (like maple or walnut) so the wing nut won't split when tightening it down. Then drill and counterbore the block to fit the size of T-nut that you'll be using.

I'll install the T-nut in the block before cutting the knob to shape. That way the block sits squarely on the workbench and makes it easier to drive the T-nut in.

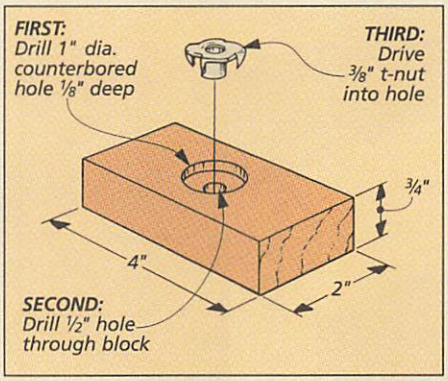

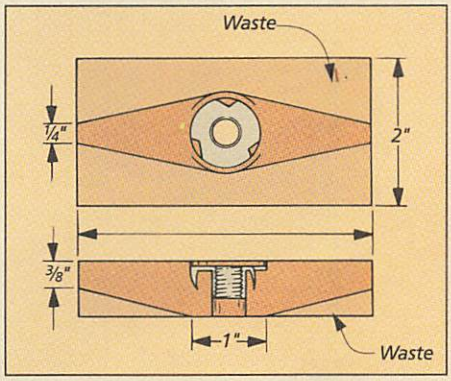

Now mark the location for the cuts on the sides of the block, see Fig. 2, and use a band saw to remove the waste. Then mark the location for the bevels on the bottom. It's easy to sand the beveled angle with a disc or belt sander. Finally, round all the edges of the wing nut with sandpaper to get a comfortable grip and eliminate splinters.

Tool Tote

Pinned box joints are quick and easy to make. They ensure this handy tool tote will last for years.

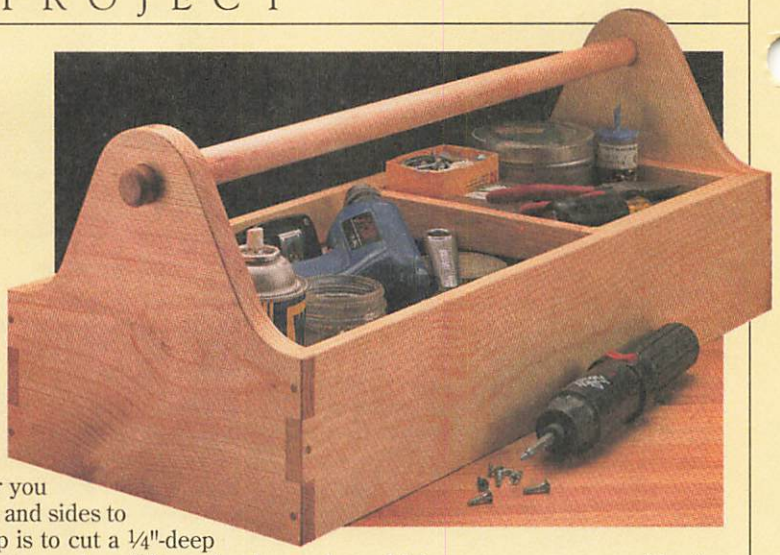

At first glance, this tool tote looks like many others — tall ends, short sides, and a round handle. But what's different is the joinery. Instead of plain butt joints or fancy hand-cut dovetails, I used box joints. The fingers are cut quickly on the table saw. Then they're pinned with dowels.

This tool tote also includes a shallow sliding tray. This tray holds all those small items like tape measures, drill bits, and screwdrivers that usually end up buried at the bottom.

SIDES. To build the tool tote, the first step is to cut the **sides (A)** to finished size, see drawing below. (I used ½"-thick pine.)

ENDS. The next step is to glue up two oversize blanks for the **ends (B)**. Here, I used ¾"-thick stock because the ends bear all the weight. Also note that the grain direction on the blanks runs horizontally, see drawing below. This way, the ends and the sides will expand and contract the same.

When the glue is dry, cut the end blanks to finish size. I cut all the joinery while the end blanks were still square. Then when the joinery is complete, the shape on top can be cut.

GROOVES. After you have cut the ends and sides to size, the next step is to cut a ¼"-deep groove near the bottom edge of the end and side pieces, see detail 'b' below. (This groove is sized to hold a ¼"-thick Masonite bottom that's added later.)

While I was at it, I cut a second groove near the top of the side pieces. This groove accepts the Masonite tray guides added after the tote is assembled.

RABBETS. Before you cut the box joints, there's one more thing to do. To hide the grooves you just cut for the bottom and tray guides, cut ¼" deep rabbets on both sides of the end blanks, see the box on the next page and detail 'a' below.

FINGERS. Now it's time to cut the box joints. The fingers on the side pieces are created by removing the waste on either side of each finger, see Fig. 1. To do this, I made multiple passes over a combination blade in the table saw, see Fig. 2.

First, lay out the fingers on the side pieces. Each finger is centered, but the im-

MATERIALS

A	Sides (2)	½ x 4½ - 23
B	Ends (2)	¾ x 10 - 10
C	Bottom (1)*	¼ - 9½ x 23
D	Tray Guides (2)*	¼ - ½ x 22½
E	Handle (1)	1 x 25 dowel
F	Pins (1)	3/16 x 20 dowel (rgh.)
G	Tray Ends (2)	½ x 1¼ - 9
H	Tray Sides (2)	½ x 1¼ - 8½
I	Tray Bottom (1)*	¼ - 8½ x 8½

* Cut from ¼"-thick tempered Masonite

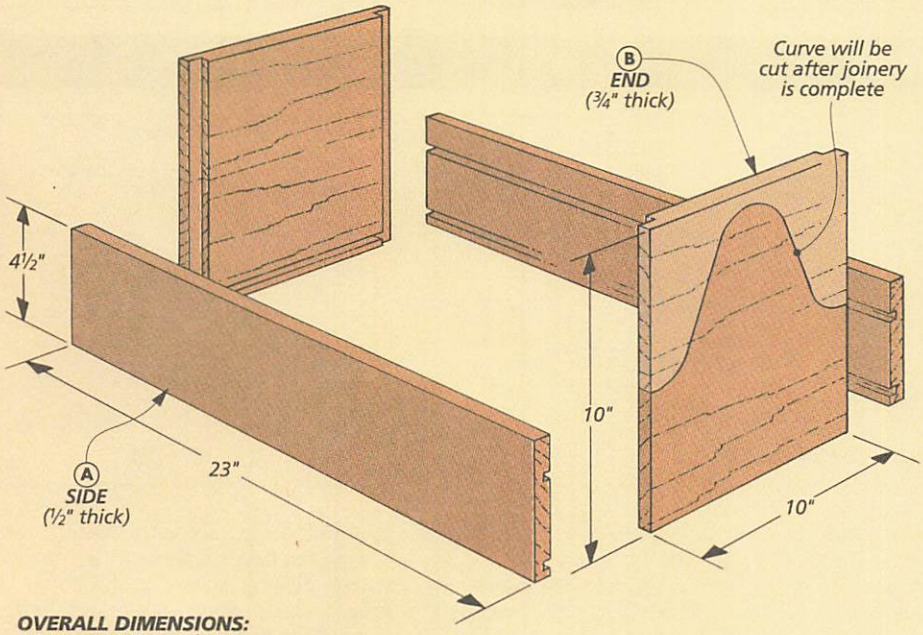

OVERALL DIMENSIONS:
24"L x 10"W x 9½"H

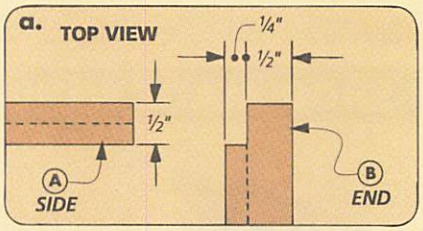

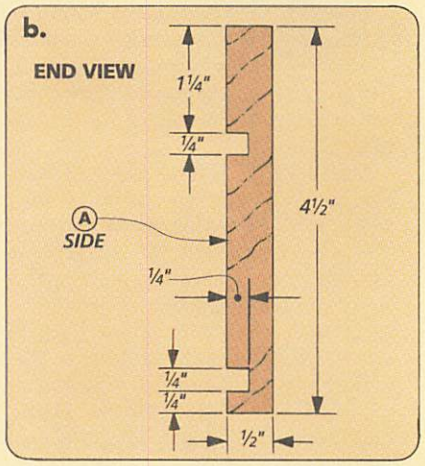

portant thing here is that it must be below the top groove, see Fig. 1.

Now to set up the table saw, first attach an auxiliary fence to the miter gauge, see Fig. 2. This prevents chipout and helps support the workpiece.

Then to determine the width of the finger, set the height of the blade. Note: Don't raise the blade right to the lay-out line. Cut the finger a little "fat." This way, the ridges created by the blade can be removed later.

The last step is to set the rip fence. This acts as a stop to determine the length of the finger. The fence is positioned so the distance to the *outside* of the blade is ½". (This should equal the thickness of the end blanks where the rabbets have been cut.)

Now remove the waste, cutting from the end of the piece in towards the shoulder, see Fig. 2a. Then flip the workpiece and cut the other side of the finger.

Finally, to clean up the edges of the finger, I trimmed them to the lay-out line with a chisel, see Fig. 3.

NOTCHES. When the sides are complete, the next step is to make the notches on the ends that the fingers fit into.

The easiest way to lay out these notches is to set the side pieces against the ends and use the fingers as templates, see Fig. 4. Mark the top and bottom edges of the fingers on the end blanks. Then transfer the lines to the face of the blanks.

This time to make the cuts, use a dado blade, see Fig. 5. Again, set the height of the blade just short of the lines. And when cutting the shoulders of the notches, leave the lay-out marks intact too, see Fig. 5. This way you can "fine tune" the fit of the box joint until it's perfect.

When the notches are roughed out, test the fit of the box joints. Since you're leaving the lay-out lines, it'll be too tight. So use a chisel to shave the tight spots, see Fig. 6.

HIDING A GROOVE

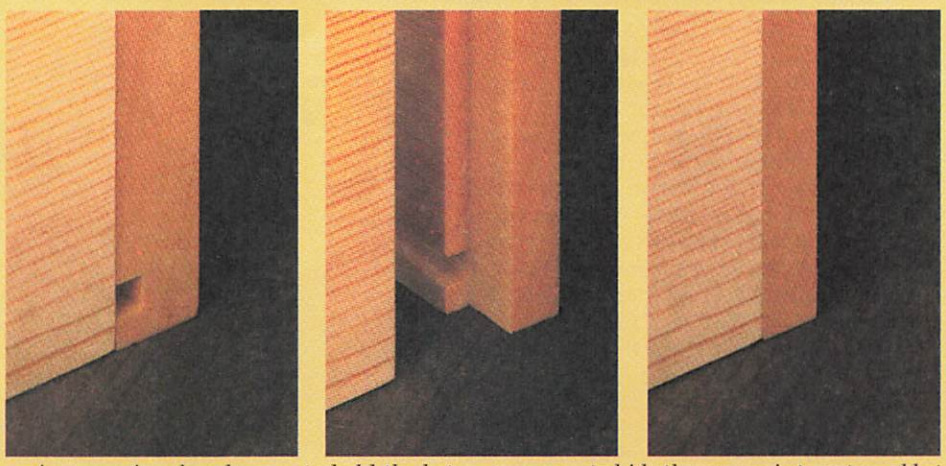

A groove is a handy way to hold the bottom of this tote, but it would also be quite visible when the tote is assembled (left). One easy way to hide the groove is to cut a rabbet in the ends (center). When the tote is put together, the groove is "buried" (right).

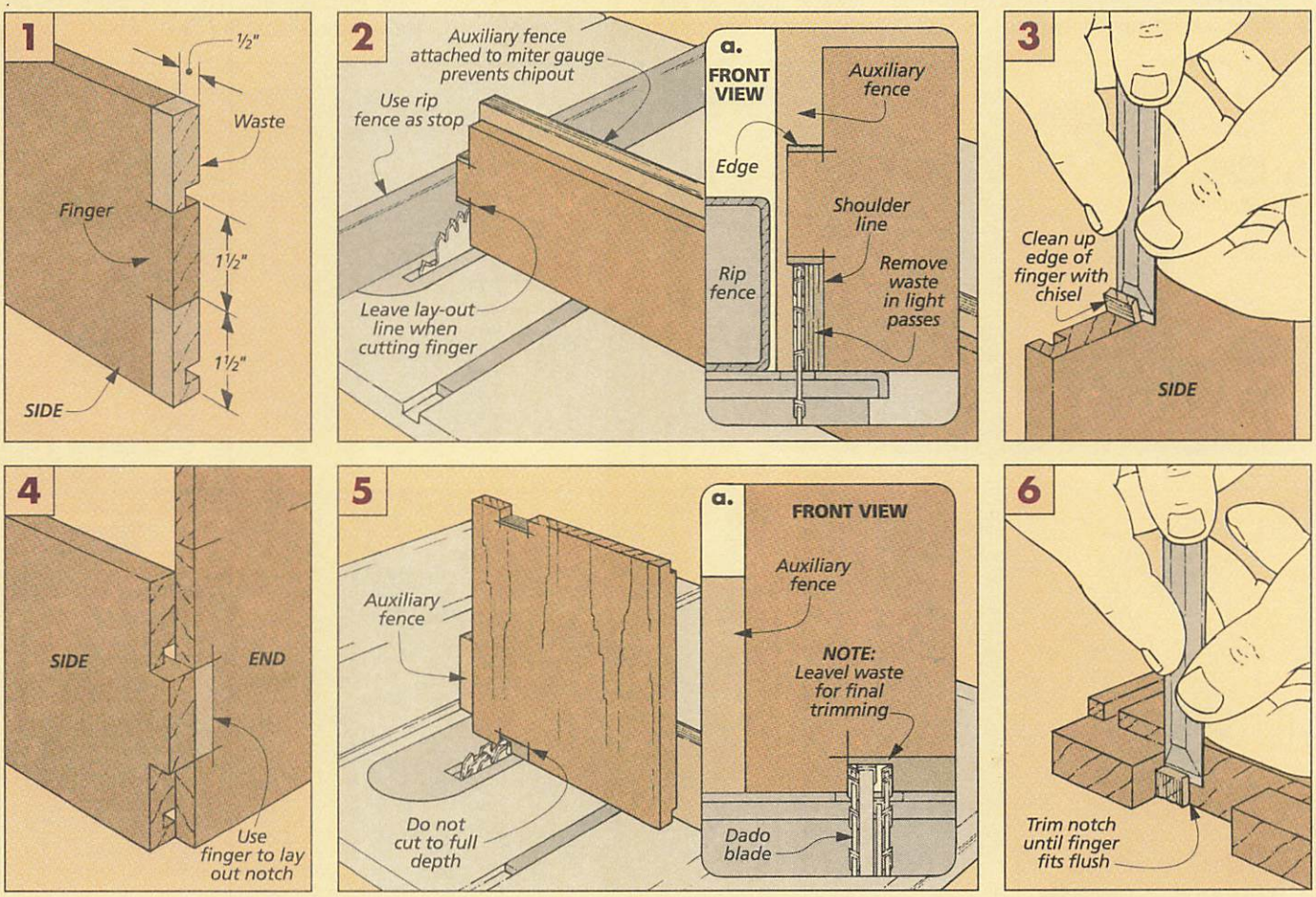

With the joinery complete, the next step is to shape the end blanks. The curves on the ends can be drawn with a compass and a straightedge. The important thing is that the top edges of the ends and sides are flush, see drawing at right.

LAY OUT ARCS. To get the ends and sides flush, I dry assembled the tote and marked the height of the sides on the end blanks, see Fig. 7. These marks show where the arcs begin at the sides of the blanks, see Fig. 8. The thing to keep in mind is that the center of each arc is ½" in from the sides.

The arc at the top of the ends has the same radius as the two at the sides, see Fig. 8. After all the arcs are drawn, simply connect them with straight lines, see Fig. 9.

HANDLE HOLE. Before cutting the ends to shape, drill a 1"-dia. hole for the handle, see Fig. 9. (Note: This hole is 8" up from the bottom of the blank.)

CUT TO SHAPE. After the hole for the handle is drilled, you can cut the curves on the ends with a band saw (or a sabre saw) and sand them smooth, see Fig. 10.

BOTTOM. Before the tool tote can be glued together, I dry assembled the ends and sides and then cut a **bottom (C)** to fit in the grooves, refer to the drawing above. (I used ¼"-thick tempered Masonite.)

ASSEMBLY. At this point the tool tote can be glued and clamped together.

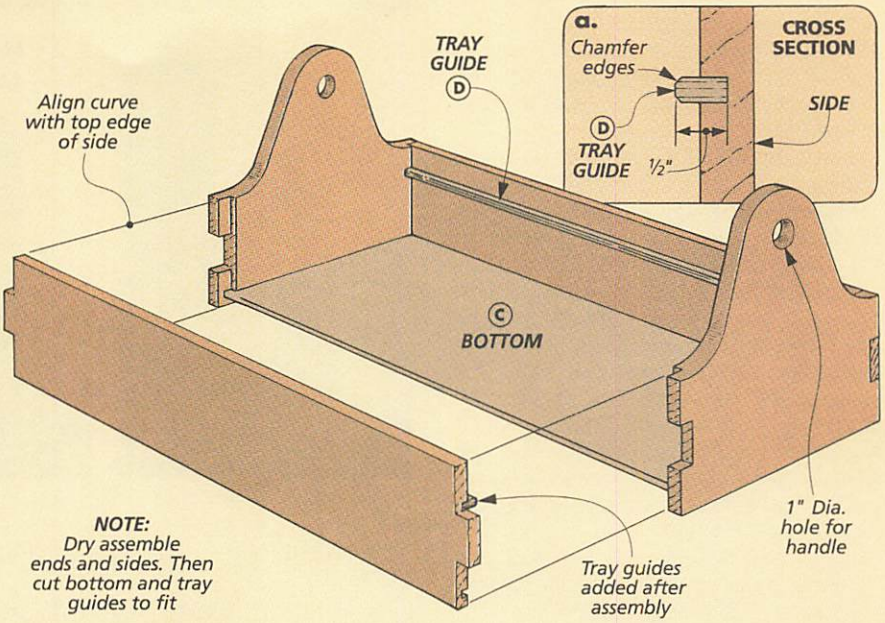

TRAY GUIDES. After the tote is assembled, add two ¼"-thick Masonite guides for the tray, see detail 'a' in drawing above. These **tray guides (D)** are ripped ½" wide and cut to fit in the grooves in the sides. After they're glued in place, I sanded a small chamfer on the top and bottom edges.

HANDLE. The next piece to be added is a **handle (E)**, see Fig. 11. To make this handle, I used a 1"-dia. hardwood dowel.

Cut the handle to overhang the tote a ½" on each end. Then rout a chamfer around each end, see Fig. 11a. (For more on this procedure, see page 17.)

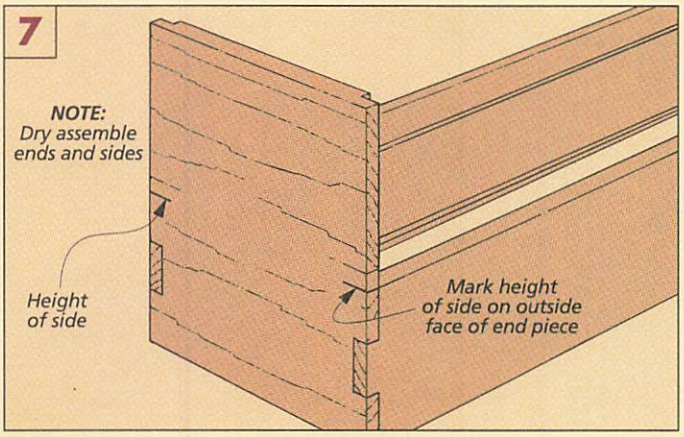

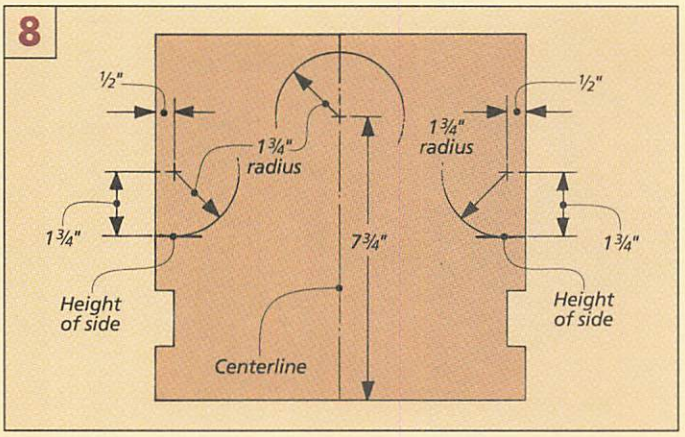

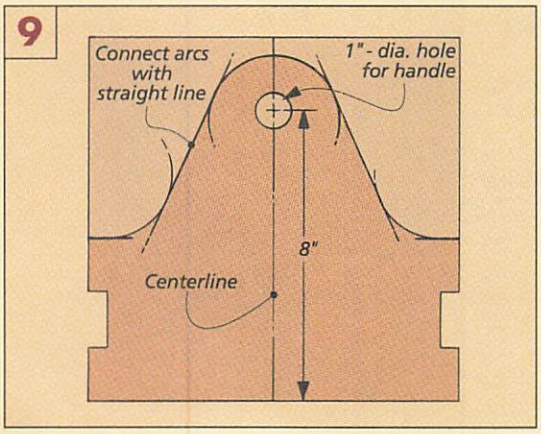

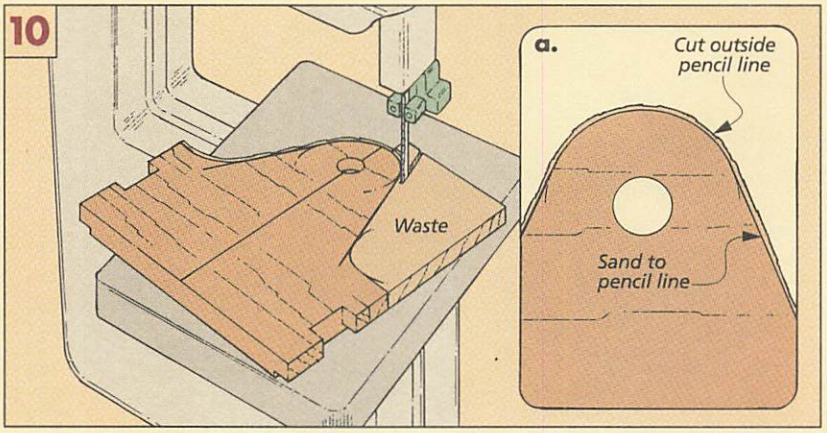

PIN HANDLE. I didn't actually glue the handle in place. The glue would simply smear and make a mess. Instead, I pinned it in much the same way that the old barn builders would pin frame joints, see Fig. 11. These pins lock the handle in place.

To pin the handle, drill a 2½"-deep pilot hole in the top of the end piece through the handle, see Fig. 11a. Then for the **pins (F)**, glue 3/16"-dia. dowels into the holes and trim them flush with a chisel.

PIN JOINTS. I used this same procedure to pin the box joints. These pins are centered on the width and length of the fingers of the box joints. The only difference is that the holes for the pins are only 1" deep.

After trimming the pins flush, I softened all the sharp corners with sandpaper. Then I wiped on a couple coats of an oil finish before beginning work on the tray.

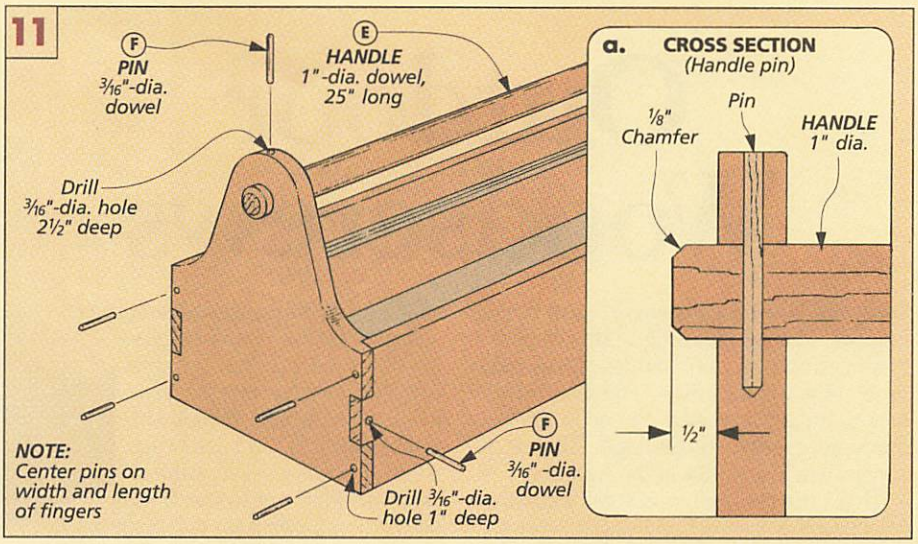

TRAY

The last step is to build the tray, see photo at right. The height of the tray should equal the distance between the guides and the top of the tote. I made my tray square so it fit in the tote in either direction.

ENDS & SIDES. Begin by cutting the **tray ends (G)** and **sides (H)** to finished size, see Fig. 12. (To avoid a loose fit, I cut these pieces so the tray fit the opening exactly. After the tray was assembled, I sanded the sides and ends until it was able to slide.)

Next, cut a ¼" x ½" rabbet on the end pieces to hold the side pieces, see Fig. 12a.

Then to hold the bottom of the tray, cut a groove in the sides and ends, see Fig. 12b.

TRAY BOTTOM. The last piece to cut to size is the **tray bottom (I)**. This is a piece of ¼" Masonite with a rabbet routed on all the bottom edges. This creates a tongue that fits the grooves on the tray pieces, see Fig. 12b.

Finally you can assemble the tray. Then chamfer all the edges, see Fig. 12b. ❑

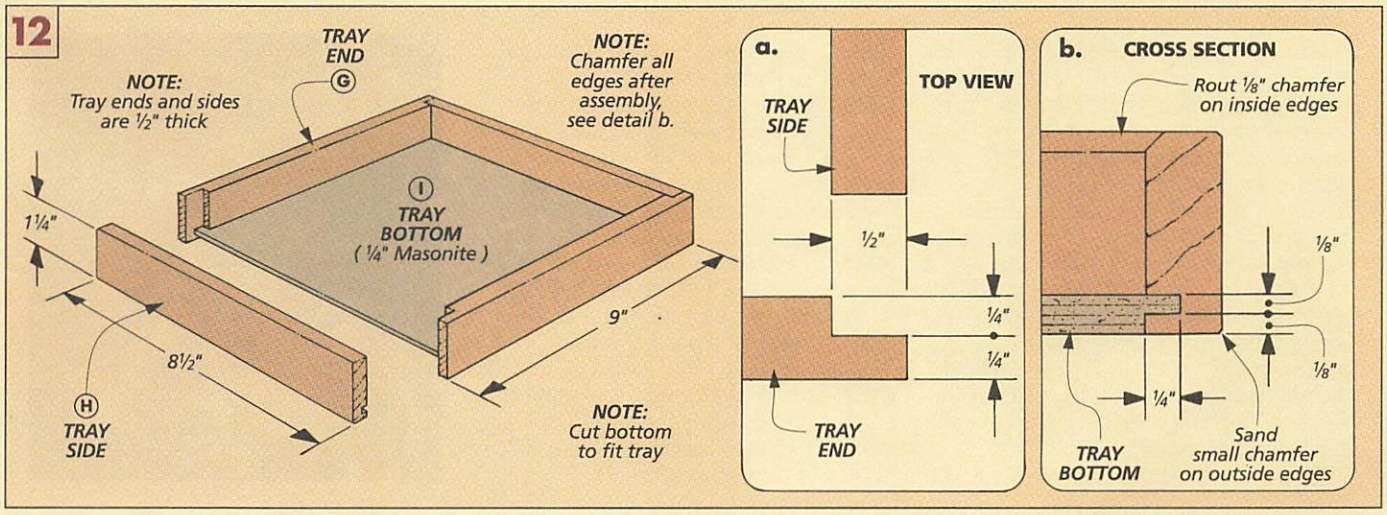

Outdoor Woodscrews

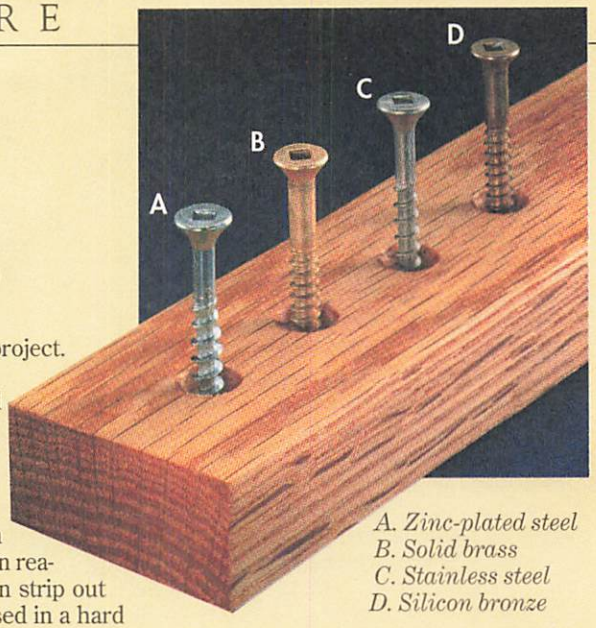

A. Zinc-plated steel
B. Solid brass
C. Stainless steel
D. Silicon bronze

Some outdoor projects never make it back indoors. The porch swing in this issue is a good example. A coat of outdoor finish helps protect the wood from the effects of the elements. But it's not just the wood in a project that's susceptible to damage. The woodscrews can also suffer in the weather.

That's the reason I took some extra time selecting the screws that hold the swing together. There were three concerns I had when deciding on the screws to use: corrosion resistance, strength, and appearance.

Most woodscrews are made from either ferrous (iron-based) or non-ferrous metal. Ferrous woodscrews are strong and inexpensive, but they can rust very quickly when exposed to moisture.

Even the moisture in the wood itself is enough to rust a plain steel screw. For this reason, steel woodscrews are usually covered with a rust-resistant coating.

PLATED STEEL. Typically, there are a couple of choices in plated woodscrews: brass or zinc, with zinc being the most common. Either one of these plated screws provides adequate rust protection — if they're used on indoor projects. (For a new type of plated screw, see box below.)

The problem with ordinary plated screws is that the coating is very thin. So it can easily be scratched or worn off. And when that happens, the screws will quickly begin to rust. Especially on an outdoor project.

SOLID BRASS. Woodworkers for years have relied on solid brass screws for exterior projects. Solid brass screws are readily available and don't rust when exposed to moisture. But I decided not to use them on the porch swing for one main reason — they're soft. So they can strip out or easily break. Especially if used in a hard wood like the red oak in the porch swing.

STAINLESS STEEL. A second alternative to plated steel is stainless steel, see photo above. Stainless steel is a chromium-alloy steel, and while not quite as strong as an ordinary steel screw, they're much stronger than a solid brass screw. And they won't rust or corrode when exposed to the elements.

While stainless steel may sound like the perfect outdoor woodscrew, I didn't use them for one simple reason, appearance. The stainless steel screw heads didn't blend in well with the red oak of the porch swing.

Okay, Don, you didn't use plated steel, brass, or stainless steel. What did you use?

SILICON BRONZE. For maximum rust resistance there's a woodscrew preferred by boatbuilders — silicon bronze. These woodscrews are made from an alloy of copper with silicon included in the mixture for additional corrosion resistance.

Silicon bronze screws are stronger than solid brass, but they're not quite as strong as steel screws. However, for the porch swing, the deciding factor ended up being the color of the screws. Bronze blends best with the color of red oak.

But this extra rust and corrosion resistance also comes with an extra cost. Silicon bronze woodscrews cost nearly four times as much as ordinary plated steel screws.

Note: If you plan to build the porch swing in this issue, we've put together a package of silicon bronze woodscrews with the sizes and quantities needed for the project, see Sources on page 31.

The porch swing looks great with silicon bronze screws, and it will probably hold up for years. But if the color of the screw is less of a concern than cost, a good alternative might be a rust-resistant steel woodscrew, see box below.

RUST-RESISTANT STEEL SCREWS

After completing the porch swing in this issue, I came across two new kinds of outdoor woodscrews. They're highly corrosion resistant and not much more expensive than ordinary zinc-plated steel screws. I had to find out more.

One of these new screws looks almost identical to a zinc-plated screw, see photo at right. It's made from steel with a coating of yellow zinc-chromate (like an outdoor deck screw). On top of this is a thin coat of a clear, rust-resistant material, almost like a see-through raincoat. (These particular woodscrews are available from The Woodworkers' Store, see Mail Order Sources on the bottom of page 31.)

The second outdoor screw I learned about is also made from steel, but galvanized with several coats of rustproof metals. (Available from McFeeley's, page 31.)

Both of these rust-resistant steel screws are rated to withstand a wet environment (in a moisture chamber with a 5 percent salt spray solution) for at least 500 hours. By comparison, ordinary zinc-plated woodscrews are rated to last about 100 hours before the first red rust appears.

Although we haven't had a chance to test these new types of screws in the Woodsmith shop yet, it sounds to me like either one would be worth trying on an outdoor woodworking project. Especially a project where the color of the screws isn't an important concern.

Sources

PROJECT SUPPLIES

PORCH SWING. Most of the hardware for the porch swing should be available at your local hardware store. But you may have trouble locating the screws.

Bronze screws and other non-corrosive screws are available from the sources listed below (usually in bags of 50 or 100). But *Woodsmith Project Supplies* is offering a kit with all the bronze screws needed to build the swing. (To order, see below.)

- (55) #8 x 1½" Silicon Bronze Flathead Woodscrews
- (17) #8 x 2" Silicon Bronze Flathead Woodscrews
- (8) #8 x 1¼" Silicon Bronze Flathead Woodscrews

W98-798-100 Porch Swing Bronze Screw Kit $19.95

Note: These are square-drive screws, so in case you need them, we're also offering a hand driver and a power driver.

W98-5001-313 Square-Drive Hand Driver $2.95

W98-5503-314 Square-Drive Power Driver..... $1.25

HALL MIRROR. The mirror and most of the hardware for the hall mirror should be available at your local hardware store. The keyhole hangers are available from the sources below.

FINISHES

PORCH SWING. I wanted the finish on the porch swing to protect the wood and also to be easy to renew. So I applied a water repellent/preservative like those commonly available at home centers. (I used General Finishes' Outdoor Oil, see the source listed below.)

HALL MIRROR. For the hall mirror, I began by staining the frame with General Finishes' Honey Maple Sealacell. Then I wiped on a couple coats of Royal Finish, a wiping varnish.

General Finishes' Royal Finish is available from *Woodsmith Project Supplies* as well as the sources listed below.

W98-4003-602 Royal Finish (Satin)..... $11.95 quart

JIGS & FIXTURES

Choosing the right hardware can really improve the performance of a jig. It can make the jig easier to use or simply more comfortable. (For more on this, see the article on page 22.)

Woodsmith Project Supplies is now offering some of the hard-to-find hardware that we have found to be useful. For more information and a catalog, call the number in the box at left. Note: Similar hardware is available from the sources listed below.

SPIRAL END MILL BITS

An upcut spiral end mill bit is handy if you cut a lot of mortises, see page 15. Its spiral cutter removes chips better and cuts a clean mortise so you don't have to come back with a chisel.

Spiral end mill bits are designed for use in a router. But I've found they also work well in a drill press. (To do this, the drill press should be set at its highest speed setting.)

BIT SIZE. Spiral end mill bits are available in a variety of sizes. Since the width of the mortise is typically one third the thickness of the stock. I use a ¼"-dia. bit most often. Two other bits I use occasionally are ⅜" and ½" diameter.

SHANK SIZE. Most spiral end mill bits are available with either a ½" or ¼" shank. Typically, I prefer a ½" over a ¼" shank. The thicker shank gives the bit extra stability.

However, there is a drawback. The cutter length on a ¼"-dia. bit with a ½" shank is only ¾" long. So you can't cut a mortise deeper than ¾" with this bit. This isn't a problem for the larger diameter bits. They have longer cutter lengths.

You also don't run into this problem with a ¼"-dia. bit *with a ¼" shank*. This bit can be plunged below the length of the cutter. So you can cut mortises deeper than ¾".

Woodsmith Project Supplies is currently offering several upcut spiral end mill bits.

½" SHANK. If you need to make large mortises, there's a set of three high-speed steel spiral end mill bits available in a ½" shank only. The sizes of these bits are as follows:

- ¼" Dia. (¾" cutting length)
- ⅜" Dia. (1⅜" cutting length)
- ½" Dia. (1½" cutting length)

W98-767-275 Set of Three Spiral End Mill Bits..... $39.95

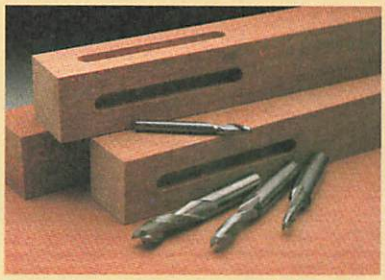

***Spiral End Mill Bits** are designed especially for cutting mortises. They can be used in a router or a drill press.*

¼" SHANK. If I were to buy just one bit, it would be a ¼"-dia. spiral end mill bit with a ¼" shank. This upcut bit is made from solid carbide, so it will stay sharp a long time.

W98-1503-250 Carbide ¼" Spiral End Mill Bit..... $19.95

Note: Upcut spiral bits are also available from the sources listed below.

HOW TO ORDER

To order a project kit from *Woodsmith Project Supplies*, use our Toll Free order line. It's open Monday through Friday, from 7 AM to 7 PM Central Time.

Before calling, please have your VISA, MasterCard, or Discover Card ready.

If you would like to mail an order in, call the number below for more information on shipping charges and any applicable sales tax.

1-800-444-7527

Note: Prices subject to change after June, 1995

MAIL ORDER SOURCES

Similar hardware and supplies may be found in the following catalogs. Please call each company for a catalog or information.

CMT Tools
800-531-5559
Spiral bits

Constantine's
800-223-8087
Keyhole hanger, Pegs, Dowels

General Finishes
800-783-6050
Outdoor oil, Oil finishes

MLCS
800-533-9298
Spiral bits

McFeely's
800-443-7937
Outdoor screws, Pegs, Dowels, Spiral bits

Trendlines
800-767-9999
Spiral bits, Dowels, Pegs

Woodcraft
800-225-1153
Spiral bits, Dowels, Pegs, Jig hardware

The Woodworkers' Store
800-279-4441
Outdoor screws, Spiral bits, Keyhole hanger, Jig hardware, Dowels, Pegs, General Finishes

Woodworker's Supply
800-645-9292
Outdoor screws, Pegs, Jig hardware, Spiral bits, General Finishes

WoodNet
COMPUTER BULLETIN BOARD FOR WOODWORKERS

- Project Plans to Download
- Woodworking HelpLine
- Back Issue Indexes for *Woodsmith* & *ShopNotes*
- Color Photos of Projects
- For PC and Mac
- FREE First Month

To log on to WoodNet, set your communication program to 8 data bits, 1 stop bit, no parity, full duplex, and ANSI terminal emulation. Then call 1-515-245-9663.

If you have any questions, give us a call: 515-282-7000 M-F 9-5 CST

A LAST LOOK

Final Details

Porch Swing. *The curved back is the most striking feature of this swing — and the most challenging to build. So we offer some simple solutions for cutting the curve and adding the slats. Complete instructions begin on page 6.*

Hall Mirror. *This mirror starts out as a basic frame held together with mortise and tenon joinery. Then a shelf, a few pegs, and some applied molding are added. Plans begin on page 18.*

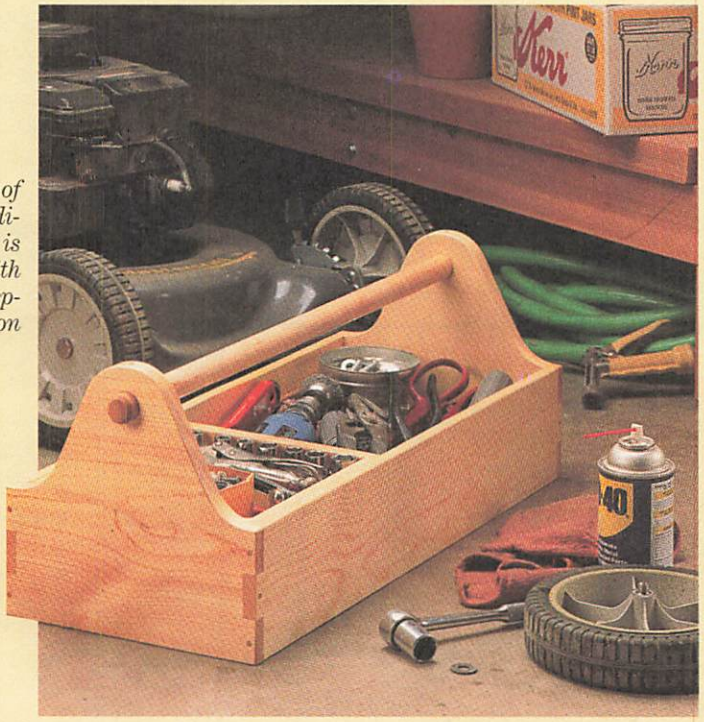

Tool Tote. *The look of our tool tote is traditional, but the joinery is unique. It's built with pinned box joints. Step-by-step plans begin on page 26.*